OWNER'S MANUAL

AX/E 22

MODEL YEAR 2026

AXOPAR

Table of Contents

1 Introduction....5

1.1 Purpose of this manual....5
1.2 Safety symbols....5
1.3 Document conventions....6
1.4 Copyright....6
1.5 Disclaimer....6
1.6 Warranty....7

2 Safety....8

2.1 Safe and responsible boat operation....8
2.2 Safety diagram....10
2.3 Fire protection and control....10
2.3.1 Fire control equipment....11
2.3.2 Boat owners' and users' responsibilities....11
2.3.3 Checklist: Fire in the motor....11
2.3.4 Checklist: After fire....12
2.4 Life raft....12
2.5 Safety labels on board....12

3 Product overview....18

3.1 Purpose of use....18
3.2 Identification....18
3.3 Builder's plate....19
3.4 CE certification....19
3.5 Dimensions and weight....20
3.6 Boat layout....22

4 Product description....23

4.1 Stability and buoyancy....23
4.1.1 Self-draining systems....23
4.1.2 Openings in the hull and deck....24
4.1.3 Bilge system....26
4.1.3.1 Bilge pumps and outlets....27
4.2 Technical systems....28
4.2.1 Navigation system....28
4.2.2 Electrical system....29
4.2.3 Charging....30
4.2.4 Shore power and high voltage system....30
4.2.5 12V system....31

© 2026 Axopar Boats

4.2.6 Main switches....32
4.2.7 Fuses....33
4.2.7.1 Heavy duty fuses....34
4.2.7.2 Direct supply fuses....34
4.2.8 12V Batteries....35
4.2.8.1 Charging the 12V batteries....35
4.2.8.2 Winter storage....35
4.2.8.3 High voltage battery....36
4.2.8.4 Cleaning the batteries....36
4.3 Optional equipment....36
4.3.1 Bow thruster....36
4.3.2 Fresh water system....37
4.3.3 Septic system....39
4.3.3.1 Toilet seat....39
4.3.3.2 Septic tank....40
4.3.4 VHF equipment....41
4.3.5 Anchor windlass....41
5 Transportation....43
5.1 Lifting the boat....43
5.2 Transporting and storing the boat....44
6 Operation....46
6.1 Handling devices....46
6.1.1 Steering console....46
6.1.2 Steering console switch panel....47
6.1.3 Steering system....48
6.1.3.1 Checking and topping up oil....48
6.1.3.2 Steering maintenance....48
6.1.3.3 Electric motor lever....49
6.1.4 Starting....49
6.2 Swivel seat - Driver and passenger seats....50
6.3 Inspecting the boat....51
6.3.1 Checklist: Regular inspection before leaving harbor....51
6.3.2 Checklist: After using the boat....51
6.4 Handling the boat....52
6.4.1 Checklist: Boat handling before leaving harbor....52
6.4.2 Leaving the jetty....52
6.4.3 Driving the boat....53
6.4.3.1 Emergency stop....53
6.4.3.2 Driving at high speed....53
6.4.3.3 Driving in rough seas....54
6.4.3.4 Maneuvering in narrow channels....55

© 2026 Axopar Boats

6.4.4 Visibility from steering position....55
6.4.5 Using the trim tabs....56
6.5 Preventing falling overboard....56
6.6 Anchoring, docking and mooring....57
6.6.1 Fastening points....57
6.6.2 Docking....58
6.6.3 Checklist: Before anchoring....58
6.6.4 Towing and mooring....59

7 Maintenance....60

7.1 Cleaning and maintaining the gelcoat surface....60
7.2 Antifouling....62
7.3 Maintaining the interiors....63
7.3.1 Plastic and painted surfaces....63
7.3.2 Doors and hatches....63
7.4 Maintaining the cover....63
7.4.1 Cleaning the cover....63
7.5 Protecting underwater metal parts....64
7.6 Preventing corrosion....64
7.7 Preventing frost damage....64
7.8 Checklist: Before winter lay-up....65
7.8.1 High voltage battery....65
7.9 Checklist: Before launching....66
7.10 Maintenance log....66
7.11 Corrective maintenance....68
7.11.1 Deposits....68
7.11.2 Scratches and nicks....68
7.11.3 Stains....68
7.11.4 Deep marks, gouges and holes....68

8 Environment....69

8.1 Requirements for North America....69

9 Appendix I: Checklists....71

9.1 Checklist: Fire in the motor....71
9.2 Checklist: After fire....71
9.3 Checklist: After grounding....71
9.4 Checklist: Regular inspection before leaving harbor....72
9.5 Checklist: After using the boat....73
9.6 Checklist: Boat handling before leaving harbor....73
9.7 Checklist: Before anchoring....73
9.8 Checklist: Before winter lay-up....74
9.8.1 High voltage battery....74

© 2026 Axopar Boats

9.9 Checklist: Before launching....75
9.10 Maintenance log....75
10 Appendix II: Electrical diagrams....77
11 Appendix III: AIS Decontamination – North America....78
12 Appendix IV: Transport dimensions....79
13 Appendix V: Warranty terms....80
13.1 Warranty terms: US....81
13.2 Warranty terms: non-US....82

© 2026 Axopar Boats

1 Introduction

1.1 Purpose of this manual

This owner's manual contains important information and instructions for using your boat.

In this owner's manual you can find important information that help you handle and maintain your boat. The manual contains detailed information about the boat and the systems installed, and general information about handling and taking care of the boat. The latest version of the manual is available in electronic format at the manufacturer's website.

Read the manual carefully and familiarize yourself with your boat before you start to use it. Also ensure that the anticipated wind and wave conditions correspond to the design category of your boat, and that you and your crew are able to handle the boat in these conditions.

This owner's manual is not a substitute for boating safety skills or good seamanship.

If this is your first boat or if this boat type is new to you, ensure you can handle the boat before you set out for the first time.

For information about local sea schools and approved instructors, please ask your boat dealer, the local boat clubs and national motorboat or yacht federations for advice. They can also provide information on specific local regulations on issues such as a driving licence or authorization, registration, insurance, and safety equipment.

This owner’s manual is not a detailed maintenance or troubleshooting guide. If problems occur, contact the boat manufacturer or its local representative. When you are in need of maintenance or repair and alteration work, always turn to competent and trained professionals. Changes that can affect the boat’s security features must be assessed, carried out and documented by competent professionals. The boat manufacturer cannot be held responsible for unauthorized modifications. Every change to the boat’s center of gravity (from highly mounted heavy equipment or a new motor type etc.) significantly affects the stability, trim and performance of the boat.

Keep this manual in a safe place and pass it on to the new owner if you sell your boat. If the manual is mislaid or destroyed, a copy can be ordered from your dealer or downloaded from the manufacturer's website.

See the purchase agreement or order for the scope of your purchase. In case something does not work satisfactorily with your boat or its equipment, you can check the service documents for possible service and repair measures. If uncertain, always contact your dealer.

1.2 Safety symbols

This owner's manual contains danger, warning, caution and notice statements informing the user or authorized service representatives of any potential harm to the product or person.

Hazard is defined as a source of potential injury to a person.

All abnormal use is forbidden, including disregarding information on safety.

© 2026 Axopar Boats

⚠ DANGER	**Danger** indicates an imminently hazardous situation which, if not avoided, **will result in death or serious injury**.
⚠ WARNING	**Warning** indicates a potentially hazardous situation which, if not avoided, **could result in death or serious injury**.
⚠ CAUTION	**Caution** indicates a potentially hazardous situation which, if not avoided, **might result in minor or moderate injury**.
NOTICE	**Notice** indicates a potential situation which, if not avoided, **might result in property damage or in an undesirable result or state**.
ℹ	The information icon calls attention to information that clarifies or simplifies a procedure.

1.3 Document conventions

Units

This manual uses SI units in accordance with ISO 1000. In some cases, other units may have been used alongside.

An exception is the wind velocity, which in the Recreational Boat Directive is given in the Beaufort Scale.

Terminology

In this manual, the right side of the hull is referred to as starboard and the left side as port.

1.4 Copyright

Copyright ©2026 Axopar Boats. All rights reserved.

This Owner's Manual is protected by copyright controlled by Axopar Boats. This manual cannot be wholly or partly reproduced without prior written authorization by Axopar Boats. This material also contains confidential information, which may not be disclosed to others without the prior written consent of Axopar Boats.

1.5 Disclaimer

The material in this manual is for information purposes only.

Axopar Boats reserves the right to change the products without prior notice to improve reliability, function, design or other characteristics of the products. Axopar Boats assumes no liability for any damages, losses, costs or expenses arising out of or relating to the use of this manual or the products described herein.

Axopar Boats makes no representations and warranties with respect to this manual, either express or implied, including, but not limited to, the implied warranties of merchantability and fitness for a particular purpose.

1.6 Warranty

The Limited Warranty for the boat and the relevant contact information are enclosed as a separate document.

For any warranty claims, please contact your Axopar dealer mentioned on the cover page.

© 2026 Axopar Boats

2 Safety

⚠ WARNING

The boat owner is responsible for making sure that the safety equipment on the boat meets the rules and regulations of the local authorities.

- Keep the necessary safety equipment up to date and on the boat at all times.

Check the preferred location of the major safety equipment in the section ***Safety diagram***.

⚠ WARNING

Overloading the boat can damage the motor, even when shut off.

- When loading the boat, never exceed the maximum recommended load of the boat shown in the builder's plate.
- Always load the boat carefully and distribute loads appropriately to maintain design trim.
- Avoid placing heavy equipment or material high up in the boat.

The liquids in the built-in tanks are not included in the maximum load shown on the builder's plate.

⚠ WARNING

When out on the water, always use the seats intended for the passengers.

Do not exceed the maximum number of persons allowed in the boat, shown in the builder's plate.

The total weight of the persons on board and their personal luggage must never exceed the maximum load of the boat shown in the builder's plate.

⚠ CAUTION

Risk of personal injury and risk of damage to the roof or roof structures.

Do not place or attach any load or equipment on the roof or to the roof structures if there is no specific roof rack.

It is forbidden to enter the roof or dangle from the roof structures.

2.1 Safe and responsible boat operation

Please familiarize yourself to these safety aspects before using the boat.

The person controlling the boat is in charge of the safety of all the passengers as well as other seafarers.

⚠ CAUTION

The owner is responsible for ensuring that the normal mode of operation is maintained. This means that the speed of the craft needs to be matched to the prevailing sea state, the craft being used "with good seamanship behaviour."

Neglecting these safety rules might lead to serious injury or death.

© 2026 Axopar Boats

- Anyone who controls the boat must be competent to operate a boat of this type and size.
- The boat must not be controlled by an unqualified operator or by an operator under the influence of alcohol, drugs or other substance which impair judgement.
- The boat must always be operated at speeds that will not put people or property in danger.
- The captain must constantly be aware of conditions surrounding the boat when underway and especially before sharp turns.
- In challenging conditions such as rough water and winds, impaired visibility, and congested waterways; reduce speed, use appropriate navigation equipment and lights, and use a lookout to identify possible hazards.
- Pay attention to your wake. It can endanger smaller boats or damage moored boats or other property. You are responsible for damage caused by your wake.
- Only allow passengers to ride in areas that do not pose a hazard to themselves or the boat.
- Do not allow passengers to ride on aft folding seats, aft fender boxes or gunwales.
- Passengers must remain seated while the boat is moving.
- Use of alcohol, drugs, or other judgment-impairing substances poses a serious threat to yourself and others. The boat operator is responsible for the behaviour of people on board.
- For every passenger on board, the boat must carry one wearable personal flotation device (PFD).

⚠ WARNING

Speed hazard

This is a high-performance vessel; the speed of the craft needs to be adapted to the environment. To ensure your passengers' safety and comfort, avoid sharp turns in speeds exceeding 40 knots. Never operate your boat at speeds which exceed your ability to react to surprising and unpredictable situations. The captain is always responsible for operating the vessel in a safe way.

⚠ WARNING

Never operate a boat at a speed at which you do not feel comfortable.

⚠ DANGER

Slipping hazard

Deck might be slippery when wet, even on non-skid areas. Be extremely cautious on slippery surfaces and wear suitable footwear.

⚠ DANGER

Do not go out boating in severe weather conditions as this might lead to serious injuries or death. Always get back to shore before the weather turns bad.

© 2026 Axopar Boats

2.2 Safety diagram

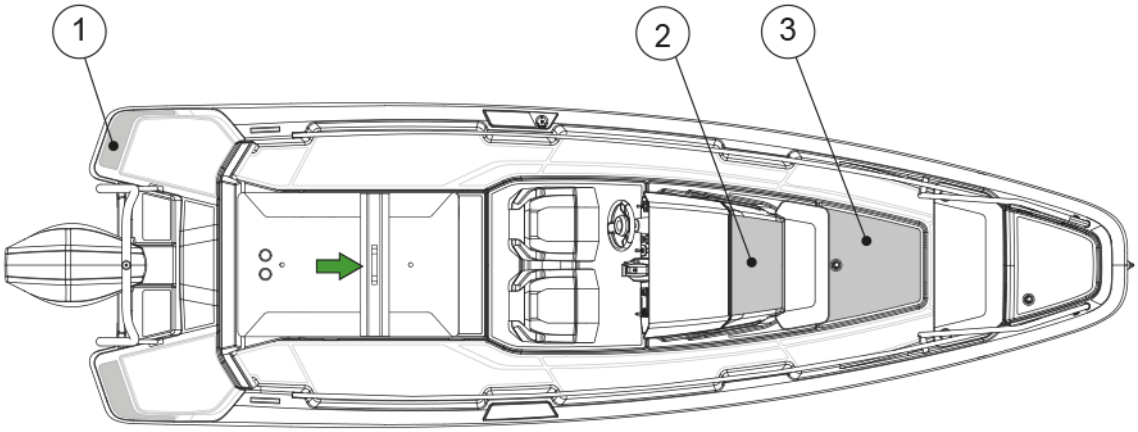

(1) Swim ladder
(2) Fire extinguisher
(3) Life raft storage
→ Exit

2.3 Fire protection and control

The most common fire sources are the motor and the stove. If there is a fire in the boat, it may result in an explosion.

⚠ WARNING

Fire usually spreads very fast — be quick to extinguish the fire with the fire extinguisher on the boat!

See the section ***Safety diagram*** for the exact location of the fire extinguisher(s).

If the fire starts to get out of control, leave the burning boat to save lives.

⚠ WARNING

Always put down the fire by depriving the fire of oxygen.

Do not use water!

⚠ WARNING

- Keep the bilge clean.
- Never replace gas containers when the motors are running.
- Never smoke when handling gas.
- Never block evacuation routes or emergency exits.
- Never block access to safety equipment such as main power switches.
- Never block access to fire extinguishers, visible or concealed.
- Never modify the boat's systems (especially electrical or gas systems).

© 2026 Axopar Boats

2.3.1 Fire control equipment

Check the exact locations of the fire control equipment in the section ***Safety diagram***.

Fire extinguishers

You must fit the boat with a hand-held fire extinguisher with a fire rating of at least 8A/68B.

Check the exact locations of the fire extinguishers in the section ***Safety diagram***.

The fire extinguishers are not included in the manufacturer's delivery. Before using the boat, it must be furnished with fire extinguishers.

Fire blanket

A fire blanket is ideal for putting out small fires and also one of the best options if a person's clothes catch fire.

- Keep a fire blanket onboard in an easily accessible place.

2.3.2 Boat owners' and users' responsibilities

It is your responsibility as the boat owner and user to ensure that the fire control equipment is accessible at all times.

- Check the fire extinguishing equipment regularly at the intervals specified for the equipment.
- Replace equipment with expired date immediately with equivalent or better equipment.
- Advice the crew and guests of the location and instructions for use of the fire control equipment, and the location of evacuation routes and emergency exits.

2.3.3 Checklist: Fire in the motor

- Stop the motor.
- Steer the boat up against the wind, if possible.
- Make sure all passengers have life jackets.
- If necessary:
  - Evacuate the passengers.
  - Call for sea rescue.
- Shut off main power switch.
- Extinguish the fire.
- Wait until fully certain that the fire has been extinguished before opening the motor cover.

  Carefully open the motor cover and be prepared to use the handheld fire extinguisher if necessary for post-fire extinguishing.
- Put out possible smoldering fires with water.

© 2026 Axopar Boats

2.3.4 Checklist: After fire

- Open doors and windows for better ventilation.
- Inspect the boat and its equipment, and repair any damages.
- Contact local authorities, if needed.
- Make sure that the fire extinguishing equipment is refilled or replaced after use.

2.4 Life raft

The boat is not equipped with a life raft by the manufacturer.

Storing a life raft

If you decide to acquire a life raft for your boat, stow it to the bow of the boat, so that it is easily accessible in case of emergency.

Using the life raft

The life raft must be tied to the stern of the boat and prepared for use.

In an emergency, it is easiest and safest to board the life raft from the swimming deck. Switch off the motor before using the life raft.

Follow the life raft manufacturer’s instructions.

2.5 Safety labels on board

The following picture and table present the location and description of the safety labels on board. Location of the labels may vary depending on the chosen options.

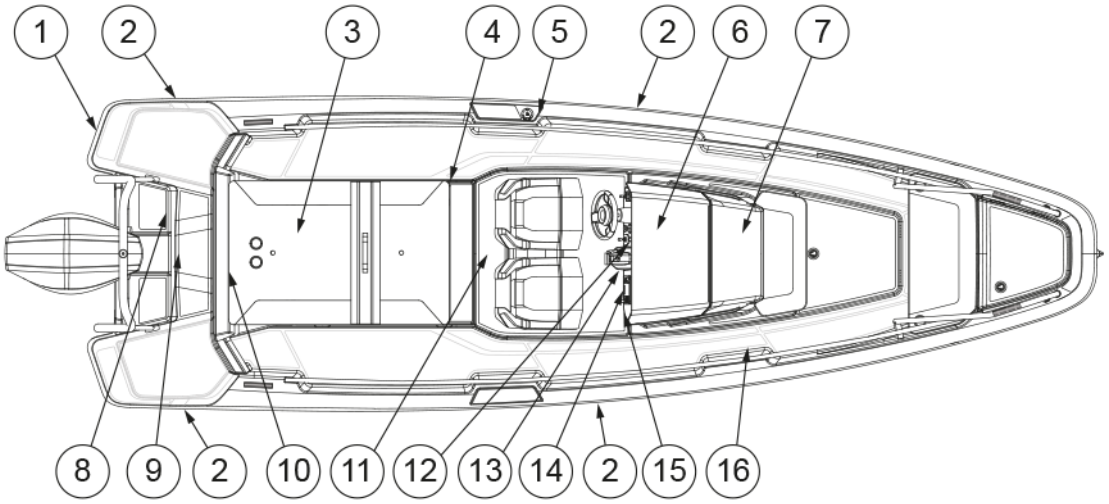

© 2026 Axopar Boats

Position	Label	Description
1		**Warning** Contact with spinning propeller will cause serious injury or death. Stay clear of boat and stay off swim platform and boarding ladder while motor is running.
2	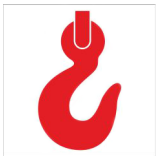	Fastening point
3		Fire extinguisher
4		**Warning** No ventilation is provided. Fuel vapors are a fire and explosion hazard. To avoid injury or death, do not store fuel or flammable liquids here.
5		**Warning** Qualified operator to be in control at all times. Operation by an unqualified operator can cause loss of control. This may result in severe injury, death, or property damage. Boat stability and handling will change with weight distribution. Read owners manual before use.
5	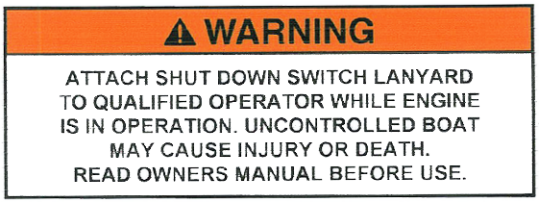	**Warning** Attach shut down switch lanyard to qualified operator while motor is in operation. Uncontrolled boat may cause injury or death. Read owners manual before use.
5		**Warning** Use caution with skier in tow as tow rope may backlash into cockpit when released.

© 2026 Axopar Boats

Position	Label	Description
5		**Warning** Contact with spinning propeller will cause serious injury or death. Shut off engines while people are in the water near the boat, on the swim platform or on the boarding ladder. Never oparate in reverse toward a person in the water.
6		Do not drink the water
7		Sink drain shutoff valve
8	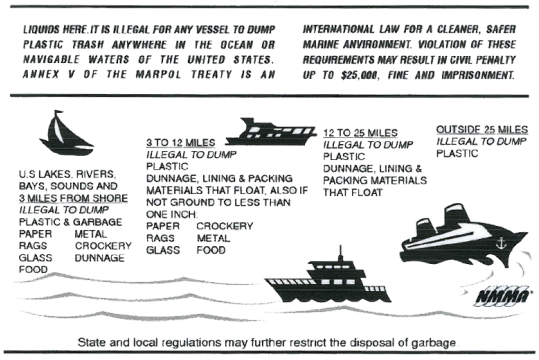	Liquids here. It is illegal for any vessel to dump plastic trash anywhere in the ocean or navigable waters of the United States. Annex V of the Marpol Treaty is an international law for a cleaner, safer marine environment. Violation of these requirements may result in civil penalty up to $25,000, fine and imprisonment. U.S. lakes, rivers, bays, sounds and 3 miles from shore Illegal to dump plastic & garbage, paper, metal, rags, crockery, glass, dunnage, food 3 to 12 miles Illegal to dum plastic, dunnage, lining & packing materials that float. Also if not ground to less than one inch: paper, crockery, rags, metal, glass, food 12 to 25 miles illegal to dump plastic, dunnage, lining & packing materials that float Outside 25 miles illegal to dump plastic State and local regulations may further restrict the disposal of garbage.
8	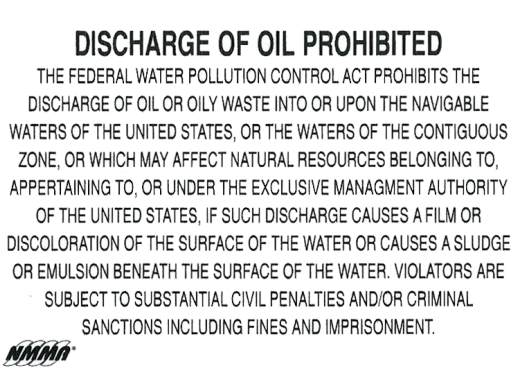	**Discharge of oil prohibited** The Federal Water Pollution Control Act prohibits the discharge of oil or oily waste into or upon the navigable waters of the United States, or the waters of the contiguous zone, or which may affect natural resources belonging to, appertaining to, or under the exclusive management authority of the United States, if such discharge causes a film or discoloration of the surface of the water or causes a sludge or emultion beneath the surface of the water. Violators are subject to substantial civil penalties and/or criminal sanctions including fines and imprisonment.

© 2026 Axopar Boats

Position	Label	Description
9	**WARNING** SKI POLE MUST BE SECURED WHEN IN USE. TOW ROPE MAY BACKLASH INTO COCKPIT. DO NOT USE TO TOW ITEMS SUCH AS TUBES OR OTHER TOWABLES. MAX TOW LOAD CAPACITY IS 130 KG.	**Warning** Ski pole must be secured when in use. Tow rope may backlash into cockpit. Do not use to tow items such as tubes or other towables. Max tow load capacity is 130 kg.
10	**WARNING** **ELECTRICAL SHOCK AND FIRE HAZARD. FAILURE TO FOLLOW THESE INSTRUCTIONS MAY RESULT IN INJURY OR DEATH.** (1) Turn off the boat's shore power connection switch before connecting or disconnecting the shore power cable. (2) Connect shore power cable at the boat first. (3) If polarity-warning indicator is activated, immediately disconnect cable. (4) Disconnect shore power cable at shore outlet first. (5) Close shore power inlet cover tightly. **DO NOT ALTER SHORE POWER CABLE CONNECTORS**	**Warning** Electrical shock and fire hazard. Failure to follow these instructions may result in injury or death. (1) Turn off the boat's shore power connection switch before connecting or disconnecting the shore power cable. (2) Connect shore power cable at the boat first. (3) If polarity-warning indicator is activated, immediately disconnect cable. (4) Disconnect shore power cable at shore outlet first. (5) Close shore power inlet cover tightly. **Do not alter shore power cable connectors**
10		Pay attention to the warnings and read the manual.
10	**WARNING** **ELECTRICAL SHOCK AND FIRE HAZARD. FAILURE TO FOLLOW THESE INSTRUCTIONS MAY RESULT IN INJURY OR DEATH.** (1) Turn off the boat's shore power connection switch before connecting or disconnecting the shore power cable. (2) Connect shore power cable at the boat first. (3) If polarity-warning indicator is activated, immediately disconnect cable. (4) Disconnect shore power cable at shore outlet first. (5) Close shore power inlet cover tightly. **DO NOT ALTER SHORE POWER CABLE CONNECTORS** **MISE EN GARDE** **RISQUE DE CHOC ELECTRIQUE ET D'INCENDIE. LE NON RESPECT DE CES INSTRUCTIONS PEUT CAUSE DES BLESSURES SERIEUSES OU LA MORT.** (1) Fermer l'interrupteur de l'alimentation à terre avant de raccorder ou de débrancher le cable d'alimenation. (2) Raccorder d'abord le cable d'alimentation à terre au navire. (3) Si l'indicateur de polarité est activé, débrancher immédiatement le cable d'alimentation. (4) Débrancher d'abord le cable d'alimentation à terre de la borne du quai. (5) Fermer hermétiquement le couvercle du cable d'alimentation à terre. **NO PAS MODIFIER LE CABLE D'ALIMENTATION À LA TERRE**	**Warning** Shore power Canada version.
11	**WARNING** AVOID SERIOUS INJURY OR DEATH. UNEXPECTED SEAT ROTATION MAY CAUSE EJECTION OF OCCUPANT. LOCK SWIVEL WHEN SPEED EXCEEDS 5 MPH.	**Warning** Avoid serious injury or death. Unexpected seat rotation may cause ejection of occupant. Lock swivel when speed exceeds 5 mph.

© 2026 Axopar Boats

Position	Label	Description
12	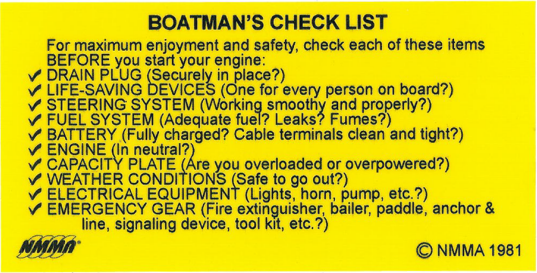	**Boatman's check list** For maximum enjoyment and safety, check each of these items before you start your motor: - Drain plug (Securely in place?) - Life-saving devices (One for every person on board?) - Steering system (Working smoothy and properly?) - Battery (Fully charged? Cable terminals clean and tight?) - Motor (In neutral?) - Capacity plate (Are you overloaded or overpowered?) - Electrical equipment (Lights, horn, pump, etc?) - Emergency gear (Fire extinguisher, bailer, paddle, anchor & line, signaling device, tool kit, etc.?)
13		**Certification plate US** Design compliance with NMMA requirements and US Coast Guard safety standards. Meets EVAP standards using certified components.
14		Maximum capacities
15		**Warning** Make sure that motor cut-off switch is mounted before delivery of the boat

© 2026 Axopar Boats

Position	Label	Description
15		NMMA Certified
16		**Warning** Avoid personal injury. Stay inside deck rails (and gates) when boat is underway

© 2026 Axopar Boats

3 Product overview

3.1 Purpose of use

The boat is a recreational boat, thus not suitable for professional use.

3.2 Identification

Each boat has a unique identification code, containing 14 characters and a hyphen.

The height of the code text is 6 mm, and it is located on the starboard side of the stern.

Example: FI – AXO2E001F525	**Data**
FI	Country of manufacturer: Finland
-	Hyphen
AXO	Manufacturer: Axopar Boats
2E	Boat model • E = Cross Bow • F = Cross Top
001	Boat number
F	Manufacturing month • A = January • B = February • C = March • etc.
5	Last digit of the manufacturing year
25	Model year

© 2026 Axopar Boats

3.3 Builder's plate

The builder’s plate is always located close to the steering position of the boat.

Boat has been inspected according to Recreational Craft Directive and related standards’ requirements. HPi Verification Services Ltd. has assigned EU Type-Examination Certificate (CE certificate) to the boat model.

Boat carries UKCA marking (shown in right bottom corner of CE plate) to indicate that it complies with the UK Recreational Craft Regulations.

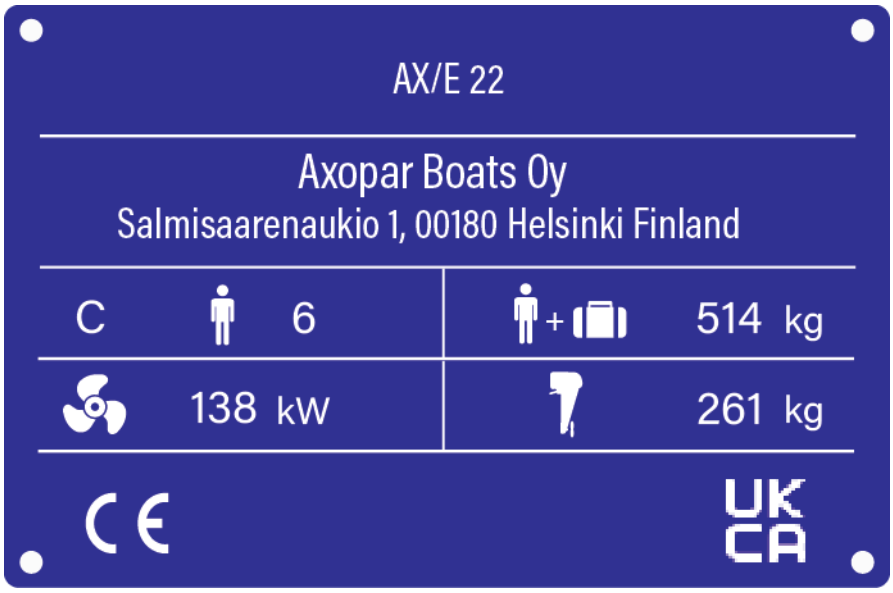

The builder's plate contains the following information:

- Boat model
- Manufacturer's address
- Maximum number of persons on board
- Maximum load: total weight of persons including personal luggage and basic equipment, and excluding tank contents

3.4 CE certification

This boat is classified to CE category C.

The category is determined according to the maximum number of persons allowed onboard.

The CE certification indicates that a boat is designed and built in such a way that it retains its stability and buoyancy in given circumstances and meets other important requirements that are characteristic of the category in question. One of these requirements is that the boat must be easy to maneuver.

© 2026 Axopar Boats

The CE categories classification also signifies that a boat is designed and constructed to withstand the following parameters in respect of stability, buoyancy, and other relevant essential requirements stated.

Category	Description
C. Inshore	The boat is designed for voyages in coastal waters, large bays, estuaries, lakes and rivers, where conditions up to and including wind force 6 Beaufort Scale and significant wave heights up to and including 2 m may be experienced.

3.5 Dimensions and weight

Dimensions

Dimension	SI units	US units
Hull length (LH)	7.2 m	23 ft 7 in
Overall length (LMAX) (excluding motor)	7.2 m	23 ft 7 in
Hull beam (BH)	2.23 m	7 ft 4 in
Draught at max. load	0.95 m	3 ft 1 in
Height measured from waterline at light load (without portable navigation light)	Spyder: 1.5 m T-Top: 2.2 m	Spyder: 4 ft 11 in T-Top: 7 ft 3 in

Power

	SI units	US units
Motor power	1 x 138 kW	1 x 186 hp

Weight and loading

	SI units	US units
Hull weight (excluding motor and 12V batteries)	2033 kg	4482 lb

© 2026 Axopar Boats

		Category C
Maximum number of persons Default weights: • Adult: 75 kg (165 lb) • Child: 37.5 kg (83 lb)		6

	Category C	
	SI units	**US units**
Total weight of all persons	450 kg	993 lb
Maximum recommended load	567 kg	1251 lb
Maximum recommended load on CE plate	514 kg	1134 lb
Boat weight at maximum load	2600 kg	5732 lb

of which

	SI units	US units
Maximum recommended motor weight	261 kg	575 lb
Personal equipment	24 kg	53 lb
Life raft weight	40 kg	89 lb
Basic equipment	24 kg	53 lb
Consumable liquids in permanently installed tanks	53 kg	117 lb
Maximum mass on trailer	2103 kg	4636 lb

Tank capacity

	SI units	US units
Fresh water tank	30 l	8 gal
Septic tank	23 l	7 gal

The boat's stability assessment is based on maximum load conditions.

The maximum recommended load only contains the weight components mentioned above.

© 2026 Axopar Boats

3.6 Boat layout

The boat has several deck options. The layout of the equipment and the technical components may vary depending on the chosen accessories.

The aft deck can be equipped with a U-sofa or a multistorage compartment.

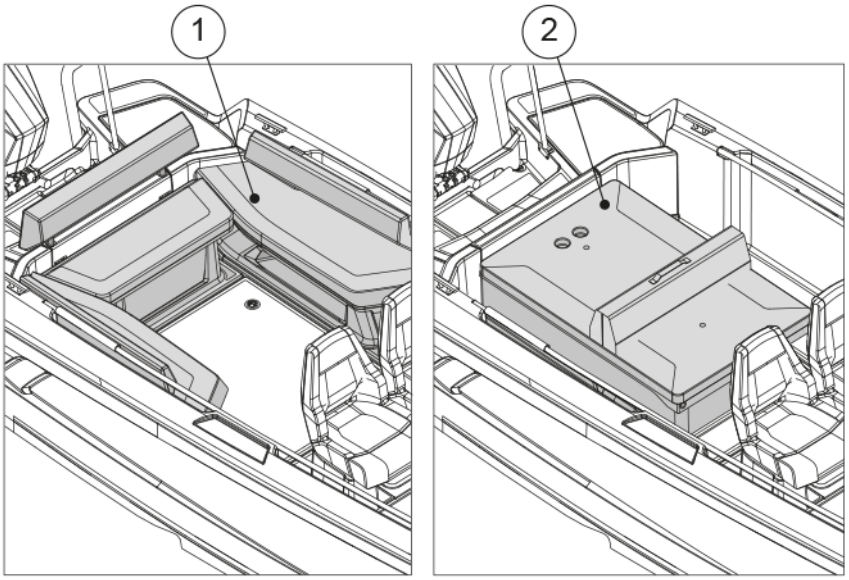

(1) U-sofa
(2) Multi-storage

In the front part of the cockpit, there is a separate storage room with a door that opens to the front deck. The storage room can be replaced with an optional toilet.

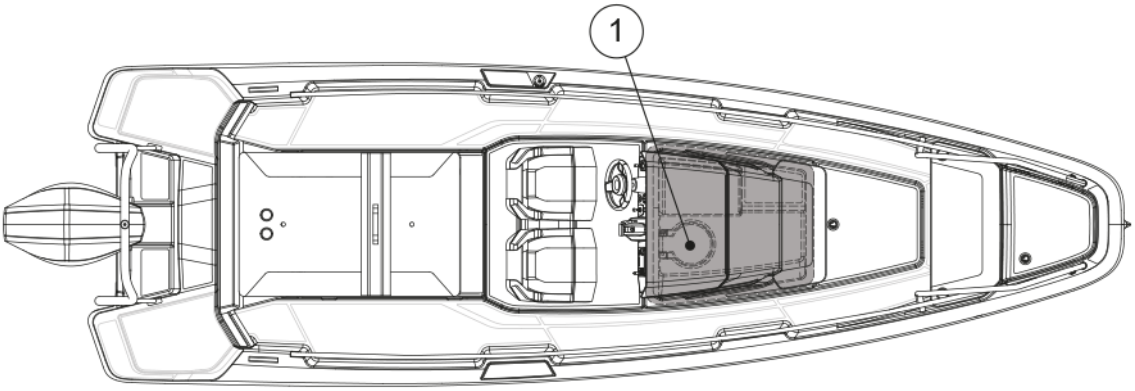

(1) Storage room or optional toilet

© 2026 Axopar Boats

4 Product description

4.1 Stability and buoyancy

Pay attention to the stability and buoyancy of the boat.

All weight dispositions (for example installing a fishing tower or radar, and motor replacement) can have a significant impact on the stability, trim, and performance of the boat.

- The bilge water level needs to be kept at a minimum.
- The stability of the boat is compromised if any weight is placed in a high position.

In stormy weather, all hatches, compartments and doors must be kept closed to minimize the risk of flooding.

Breaking waves represent a significant danger to stability.

⚠ WARNING To avoid the risk of flooding, always keep the seacocks closed when not in use (for example, the seacock for the toilet's flushing water).

4.1.1 Self-draining systems

The boat is equipped with self-draining systems for the whole deck area. The system is drained through drain holes in the aft of the boat. In addition to rainwater, the drain holes are intended to drain water ending up on the deck through splashing or from breaking waves.

There are drain holes for water in both aft corners of the deck. The openings are directly connected to the sea. The deck of the boat has been designed to allow the water to drain straight into the sea via the water gullies.

⚠ CAUTION Do not block the drain holes when using the boat.

© 2026 Axopar Boats

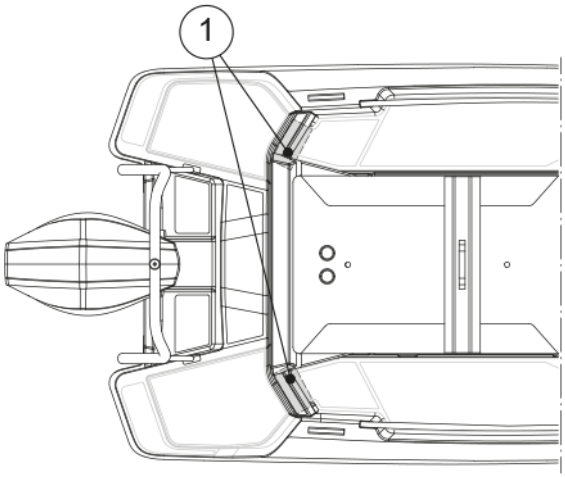

(1) Drain hole

The drain holes must be open at all times. Clean the holes regularly by removing any accumulated debris to prevent clogging.

The system is built so as to drain the water from the deck in normal use.

Do not close the taps when using the boat or when the boat is attached to the dock.

In the cockpit and driver's floor there are draining holes on both sides of the floor. Cockpit draining holes are equipped with seacocks located on transom. Driver's floor drains to a container located in front of the toilet. There is a water pump that pumps water out from the container.

NOTICE

The self-emptying open space is meant for the removal of such water that ends up on the deck through rain, splashing or from breaking waves. A part of the rain water as well as water condensation in the bilge may end up in the bilge.

- Do not leave the boat unattended in the water for a long time.
- Observe the floating position of the boat and empty the bilge when necessary.

Leaving the boat unattended in the water for a long time may cause damage.

4.1.2 Openings in the hull and deck

There are several inlets through the boat that include valves for opening and closing such inlets. It is recommended to keep these inlets closed if the boat is out of use for a long time, and to open them again when the boat is used again. If the boat is lifted out from water or in rainy conditions, inlets should be kept open.

Always check that all hatches are securely closed before and after using the boat.

We recommend that you keep the windows, doors, deck hatches, roof hatches, vents and interior doors closed while driving. In stormy weather, always keep them securely closed to minimize the risk of water getting into the boat and to avoid any personal injuries.

© 2026 Axopar Boats

In certain conditions and speeds, it is possible that water is sprayed inside through canopies, hatches or other openings, due to negative pressure or other effects. Risk for this can be minimized by closing the canopies, hatches or other openings.

⚠ WARNING All doors and hatches must be kept shut when under way.

The figure shows the hatches and seacocks that must be kept closed when the boat is left unmanned. Keep hatches closed also while underway.

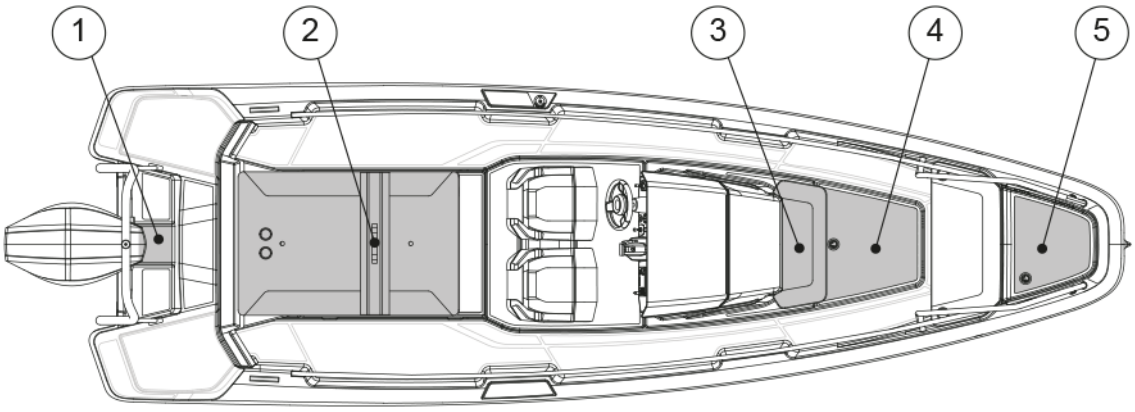

(1) Inspection hatch in the motor bracket
(2) Floor hatch or multistorage roof hatch
(3) Console door
(4) Storage box hatches
(5) Front storage box

The location and number of these components depend on the level of the equipment on the boat.

The figure shows locations of through hull fittings installed to the boat.

© 2026 Axopar Boats

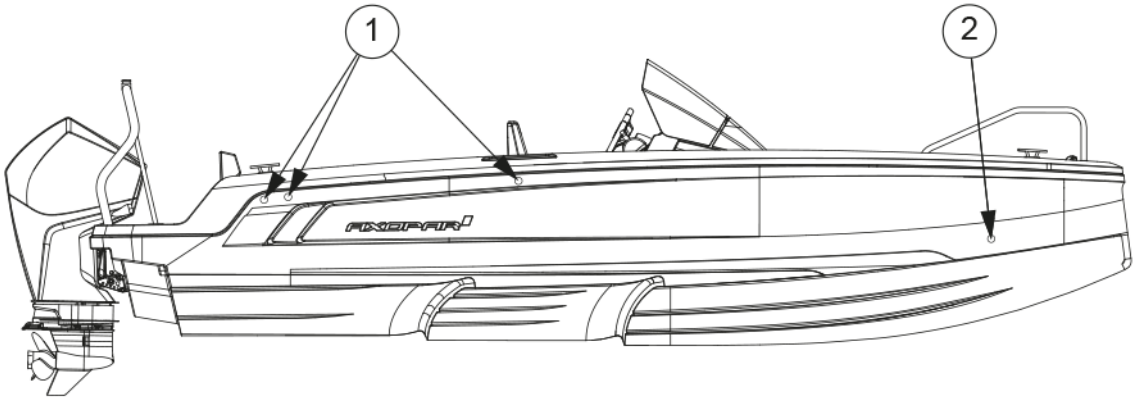

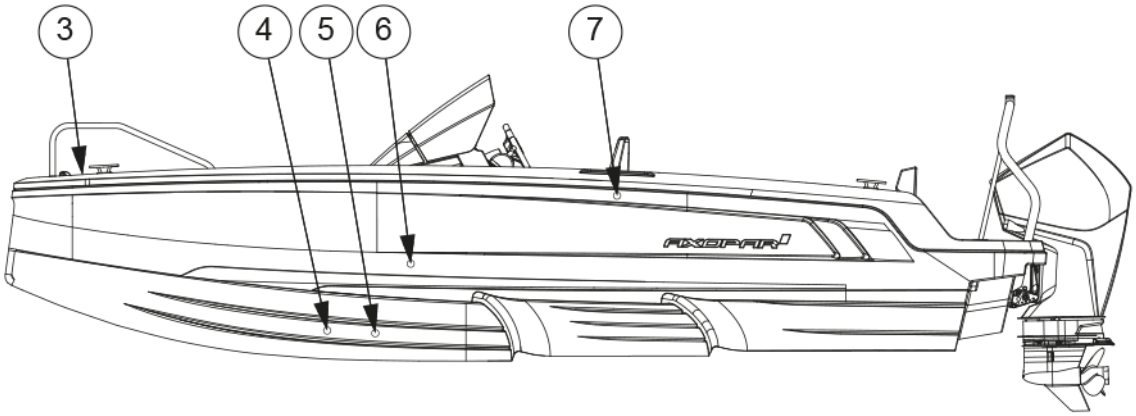

(1) Bilge outlets
(2) Anchor box drain
(3) Fresh water tank vent
(4) Waste water outlet
(5) (Transducer)
(6) Sink outlet
(7) Waste water tank vent

4.1.3 Bilge system

The bilge system is designed to enable keeping the bilge water level at a minimum. The system consists of several pumps that cover all the lower sections of the boat.

The boat is equipped with both manual and electric bilge pumps.

The manual bilge pump is controlled with its handle.

The submersible electric bilge pumps are equipped with a float which triggers them automatically if there is water in the bilge space. The electric bilge pumps can also be controlled manually from the switches on the steering console.

⚠ WARNING

The bilge system is not designed for damage control.

The combined capacity of the bilge system is not designed to pump out the boat in the event of hull damage.

© 2026 Axopar Boats

NOTICE

Keep the bilge area clean by washing it ever so often using bilge cleaner or biodegradable soap and water. Clean bilge significantly helps noticing signs of leaks or other problems that may occur.

NOTICE

- Check the functionality of the bilge pumps regularly by manually activating them.
- Remove any waste from the intakes.
- Clear the pump outlets from debris.

NOTICE

Do not run the pumps dry for a long time. The pumps will be damaged.

NOTICE

Avoid pollution.

Since the bilge system comprises of several automatic and manual pumps that cover all areas of the boat, the risk of accidental discharge of contaminated water by automatic pumps needs to be minimized.

Mitigate the risk by checking the bilge water regularly for contaminants such as oil, diesel, and glycol.

Before every use

Make sure that:

- The bilge pumps can operate freely, and there are no objects blocking operation.
- Water can flow through the strainer, and there is no muck or material restricting the water flow.

  Clean the strainer by pushing the lock tabs in the pump motor and lifting the motor unit off.

4.1.3.1 Bilge pumps and outlets

Bilge pump output

- The manual bilge pump output is 35 liters (9.2 gallons) per minute.
- The automatic bilge pump output is 50 liters (13.3 gallons) per minute.

Bilge pump locations

The manual bilge pump's control handle is located in the aft sofa or the aft of the multistorage.

The electric bilge pumps are submersible. One electric bilge pump is located in the stern of the boat, and the pump is accessible through the inspection hatch in the motor bracket.

The electric pumps are by default in automatic mode and pump out the bilge once the float-switch is triggered. The electric bilge pumps can also be started manually from the boat’s main control panel.

© 2026 Axopar Boats

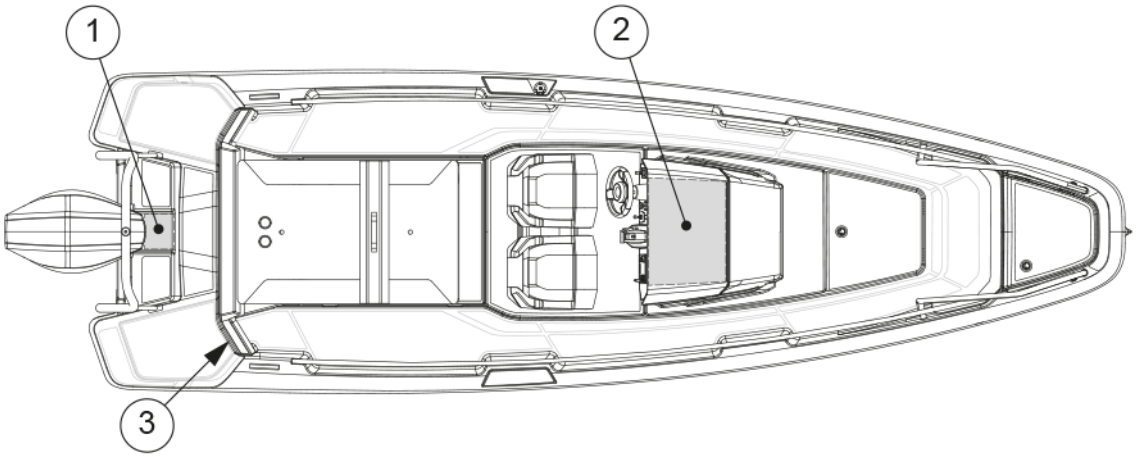

(1) Aft electric bilge pump
(2) Front electric bilge pump
(3) Manual bilge pump

The figure shows the seacocks and inlets through the side. Always check in the spring when launching that the inlets through the side and bottom are tightly closed.

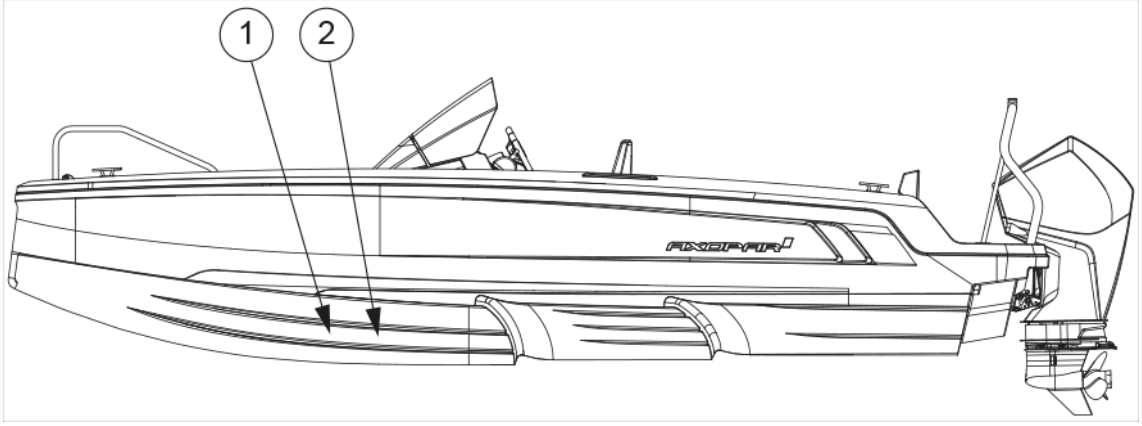

(1) Waste water outlet
(2) (Transducer)

4.2 Technical systems

4.2.1 Navigation system

Your boat can be equipped with multifunction displays (MFD).

Depending on the boat configuration, the boat is equipped with single or multiple screens.

The multifunction display can be used to show electronic charts, plot courses, and navigate the boat. It also acts as interface for marine electronics and other digitally enabled equipment on board.

© 2026 Axopar Boats

Refer to the supplier's manuals for complete user instructions and maintenance instructions of these functionalities and equipment.

4.2.2 Electrical system

⚠ WARNING

Risks of fire, explosion and electric shock!

Improper use of electric DC and AC systems may result in fire, explosion or electric shock.

Follow the instructions carefully.

⚠ WARNING

Never modify the propulsion system, battery type or system components.

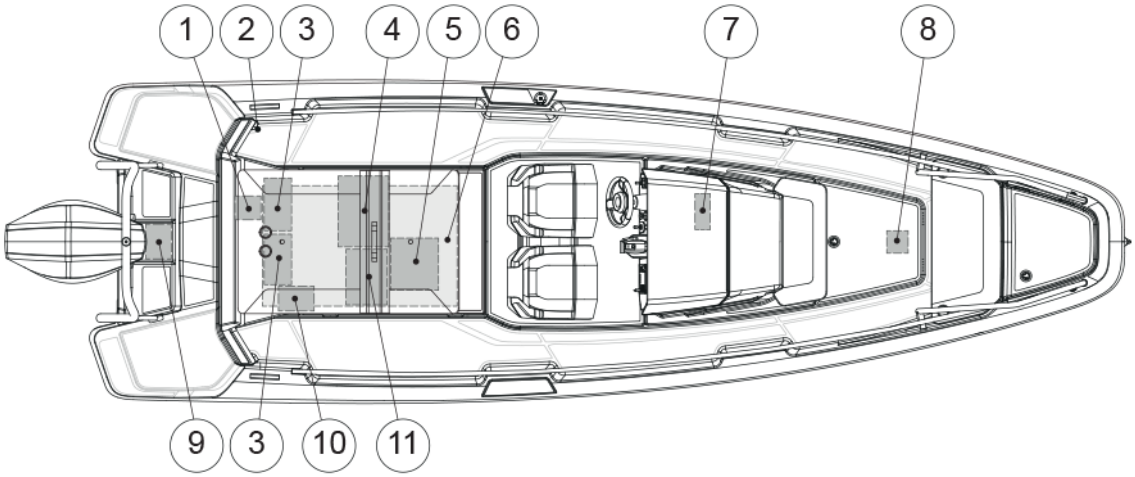

1 Main switch panel
2 Shore power inlet
3 12V batteries
4 High voltage cabinet
5 12 kW charger
6 High voltage battery (2 pcs)
7 Boat fuse panel
8 Optional bow thruster main switch and battery
9 Outboard fuses (Evoy)
10 Control system fuses (Evoy)
11 DC-DC converter

© 2026 Axopar Boats

4.2.3 Charging

Before beginning to charge, carefully read the detailed instructions provided in the motor's manual.

The boat has onboard chargers. The charging socket on the boat is of the type CCS 2. Charging can be done in three phases, 400VAC, three phases 230VAC, or single phase 230VAC net with a neutral conductor. Use suitable transitions to be able to connect to the outlet.

⚠ CAUTION You must not set a charging current that exceeds the rating of the fuse in the circuit to which you are connected. For instance, if you are on a circuit with a 32A fuse, the charging current should not surpass 32A, although lower currents like 16A or 10A can also be used. Exceeding the fuse's capacity will cause it to trip, and if the fuse is faulty, it could lead to equipment damage. Always choose an appropriate charging current before plugging in.

During charging the boat needs cooling and receives this through the sea water intake. It is important that the boat receives sufficient cooling, so the sea water intake must not be obstructed at any times.

Always connect the plug in the boat last and disconnect it first. The special kind of plug on the boat prevents you from driving if it is in.

Make sure that the cable has a good route to land so that it is not stretched or pinched between the boat and the shore / pier. Pay particular attention to tides.

To start charging

1. Move the throttle level to neutral position and check that the green light is steadily lit.
2. Disable the dead man's switch.
3. Select **Charging threshold** and **Charging current (A)** on the screen.
4. Connect the charging cable.
5. Turn off the screen, if you prefer.

Do not turn off the 12V main switches while charging.

4.2.4 Shore power and high voltage system

The high voltage battery for an electric motor is charged using a shore power connection. The integrated charger is connected to both the motor systems (Evoy) and the service battery.

For detailed instructions on charging the motor, refer to the owner's manual.

© 2026 Axopar Boats

- Do not modify the craft's electrical system or relevant drawings.
- Installation, alterations and maintenance should be performed by a competent marine electrical technician. Inspect system at least twice a year.
- Disconnect the shore power connections when the system is not in use.
- Connect metallic housings or enclosures of installed electrical appliances to the protective conductor system in the craft (green or green with a yellow stripe conductor).
- Use double-insulated or grounded (earthed) electrical appliances.

⚠ WARNING

To minimize shock and fire hazards:

- Always connect the plug in the boat last and disconnect it first.
- Close the shore power inlet cover tightly, when not in use.

The boat's plug is a specialized type that prevents operation if it remains inserted.

⚠ DANGER

Risk of electric shock and fire!

- Do not touch an energized high voltage system.
- Try to minimize the risk of electric shock, short circuit or fire.
- Do not allow the shore power cable to hang in the water. If it does, a hazardous electric field which can cause injury or death to nearby swimmers could be created in the water.
- Never modify the connections on the shore power cable. Use only compatible cable connectors and shore power receptacles.
- If the earth fault breaker is tripped, disconnect the shore power cable immediately. In such a case contact a qualified electrician for repairs before the system is used again.

4.2.5 12V system

The power is supplied to the batteries via charger from high voltage system.

To activate the circuits in the 12V system, the main switches for the corresponding circuits need to be activated and the fuses intact. When the electronic circuit is switched on, the equipment can be operated from the main switch panel.

© 2026 Axopar Boats

⚠ WARNING

- Never switch off the motor systems (Evoy) or the service battery when charging or when boat is underway.
- Never carry out electrical installations when the power is switched on.
- Never modify the boat's electrical system or diagrams. Service and maintenance must be carried out by a qualified electrician.
- Never alter or modify the rated amperage of the overcurrent protective devices.
- Never install or replace electrical equipment with components that cause the circuit's nominal rated amperage to be exceeded.
- Never leave the boat unattended with the electrical system energized, except automatic bilge pump, fire protection, and alarm circuits.
- Maintain any damaged equipment before taking it back to use.

4.2.6 Main switches

The different electronic circuits of the boat are controlled by the main switches on the distribution board.

The main switches allow the batteries to be disconnected from all devices that consume electricity. When the main switches are in the **On** position, the current is conducted to the distribution board and from there to different parts of the boat.

The background color of the main switch and the text **On** shows that the electronic circuit is switched on, and when the circuit is switched off, the background color is red and the text says **Off**.

When you leave the boat for any length of time, switch off the current from all main switches. Devices that constantly need current are active regardless of the position of the main switches.

The design drawing of the boat's electrical system is presented in appendix ***Electrical diagrams***. The main switch is located under aft seat. In the main switch panel are direct supply switches for critical equipment and main switches for the motor system (Evoy) battery, the service battery and the Aux battery.

Current feed to the motor is achieved by turning the motor systems (Evoy) switch to the **On** position, and feed to other equipment is achieved by turning the service switch to the **On** position.

© 2026 Axopar Boats

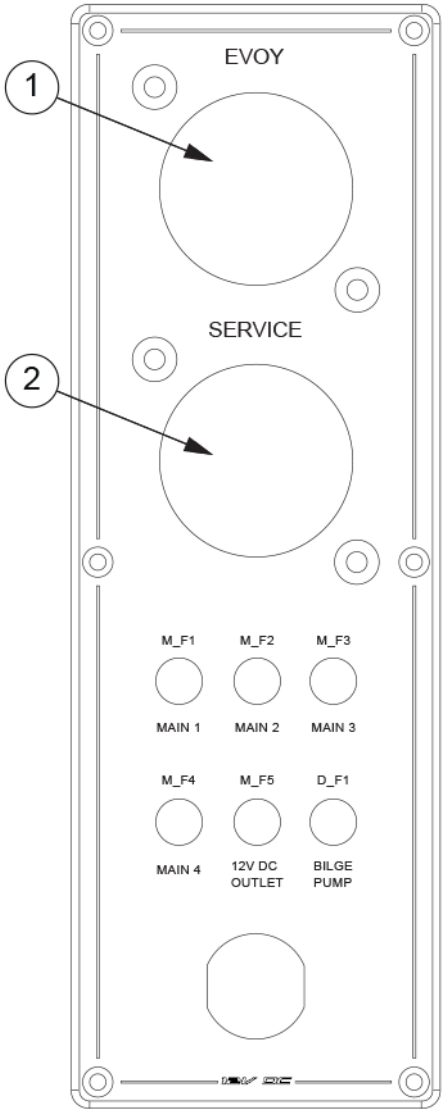

1. Evoy - motor systems
2. Service battery

4.2.7 Fuses

The fuse panel includes fuses for the boat's equipment.

The fuses are in the form of trip switches that break the circuit and spring up when tripped. Do not reset the switch before you have found out the reason for the breaker tripping. After that press the switch back down.

The panel has a combined switch and fuse for the macerator and the fresh water pump. The fuse panel also has a 12V output.

© 2026 Axopar Boats

⚠ WARNING Before connecting an electric circuit, make sure that the circuit is not damaged and that there will be no short circuit or a fire caused by possible damages in the electric circuit. Any damaged equipment must be maintained or changed before they are again taken into use.

Fuse panel in dual battery system

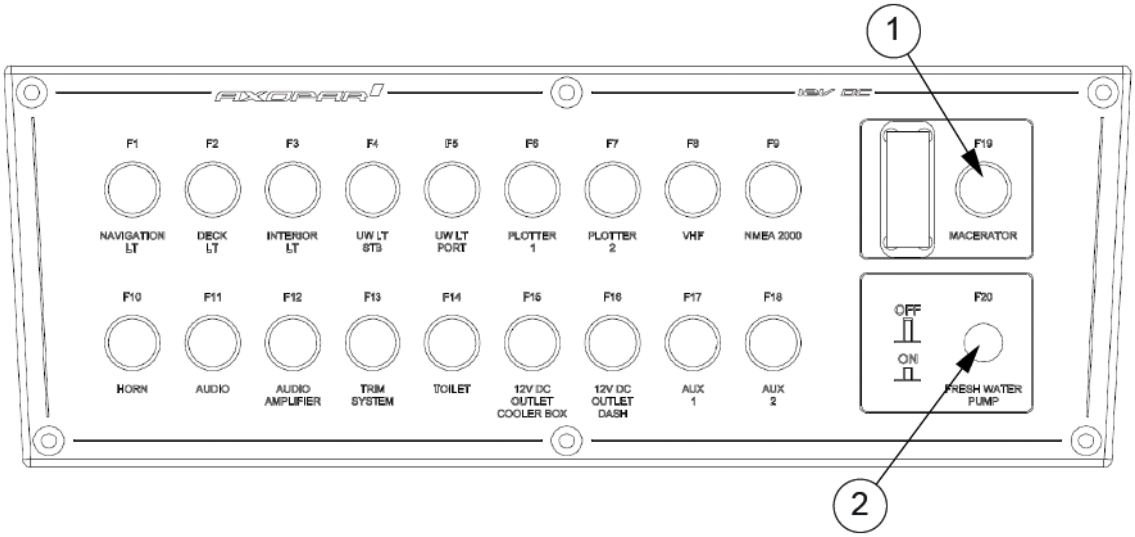

(1) Macerator pump switch and fuse

(2) Fresh water pump switch and fuse

4.2.7.1 Heavy duty fuses

The functioning of fuses can be checked from the holes in the fuse's cover. If the metal strip visible in the hole is unbroken, the fuse is operational.

If the metal strip is damaged, meaning that an overload has occurred, contact a qualified nautical electrician.

⚠ WARNING Opening the cover is not recommended, as there is a danger of electric shock and serious injury.

If the metal strip is damaged, contact a qualified nautical electrician. If it is necessary to open the cover, make sure that all the current cables from the batteries are disconnected.

4.2.7.2 Direct supply fuses

Some of the devices in the boat are supplied by direct supply switches. Direct supply switches are intended for such equipment that need current when the main switches are turned off.

When pushed down, the switch is on and when pushed up it is off. The switch indicates a short circuit or interference in the electronic circuit by springing up to the **Off** position. The switch can be reconnected

© 2026 Axopar Boats

by pushing it back down to the **On** position. Do not reconnect the switch before you have found out the reason for the interference.

The direct supply switches must be left on even if the current from other circuits is switched off. An appliance that is switched off too early may cause the appliance to overheat and become damaged.

⚠ WARNING

Turning the direct supply switch off too early may cause the device (for example, the heater) to break or catch fire, because the devices have a ventilation feature that works even if the device is otherwise switched off.

- Make sure the device is cooled down before turning it off completely. For more information, see the manual of the device in question.

4.2.8 12V Batteries

The standard boat is equipped with dual battery system.

The motor systems battery supplies current to the motor-related equipment, and the service battery for other appliances and equipment on the boat.

High voltage system has an integrated charger that provides energy to 12V batteries as long there is power in the high voltage battery

The batteries are located in the aft of the boat. The exact location of the batteries is presented in the section ***Electrical System***.

⚠ WARNING

Only use maintenance-free batteries in the boat.

- When you leave the boat, switch off the main switches unless the shore power cable is connected.
- Remove the 12V batteries from the boat for winter storage.
  - When removing a battery, detach the negative pole first.
  - When disconnecting batteries, be careful not to touch both poles at the same time with a metal tool.

4.2.8.1 Charging the 12V batteries

⚠ WARNING

- Remember that the batteries discharge an explosive oxy-hydrogen gas at a voltage of 14.4 volts.
  - The voltage of a normal battery in unloaded status is 12.3-12.7V.
  - During charging, the voltage increases and the charging regulator stops the charging process automatically at a preset level.

4.2.8.2 Winter storage

For winter storage, the 12V batteries can be left on board only if they are fully charged.

© 2026 Axopar Boats

A partially discharged battery can freeze and crack. Always disconnect the cable terminals from the battery to avoid oxidation. When removing batteries, disconnect the negative pole first and make sure that there are no flammable or explosive materials or liquids nearby. When putting the batteries back in place, connect them in reverse order (positive pole first).

Check detailed instructions for high voltage system battery storage from motor manual. Keep high voltage system at 30% state of charge during winter.

4.2.8.3 High voltage battery

- Because there is a high voltage battery in the boat, you should store it in a protected and temperate environment (0-25°C).
- To prevent battery depletion and damage, keep the main battery at a 30% charge level with the service disconnect device removed.
- For short-term storage, charge the 12V battery and disengage the main switch.
- For long-term storage, disconnect the 12V battery.
- Do not store the boat in temperatures below -40°C or above 55°C, and keep it away from heat sources.
- If the boat is exposed to sub-zero temperatures, the seawater circuit must be flushed.
- For detailed information about high voltage battery and storing, see the motor manual.

4.2.8.4 Cleaning the batteries

The top of the batteries needs to be cleaned regularly to avoid current leakage between the cells. If the battery is located in a separate area, it is normally sufficient to clean it in the spring and autumn.

Make sure that the air holes in the cell plugs are open so that gas can be vented.

The terminals and cable terminals must be lubricated to prevent deposits and corrosion.

4.3 Optional equipment

This section presents the optional equipment and systems available for the boat.

4.3.1 Bow thruster

The bow thruster enhances the maneuverability of the bow when docking or performing other maneuvers that require increased operator control.

The bow thruster is powered by the Aux battery.

The batteries must be disconnected from the electronic circuit before changing a fuse. For more information, see the manufacturer’s manual.

© 2026 Axopar Boats

⚠ WARNING

Incorrect use may cause overheating and short circuiting, and pose a fire risk.

- Use the bow thruster for only short periods at a time.
- Do not exceed four duty cycles (max. 30 seconds long in 25 mins).

If overloading occurs, contact a qualified marine electrician.

⚠ WARNING

- Do not touch the bow thruster or its fuse if the Aux main switch is switched on.

⚠ DANGER

Pinching hazard

Never put your hand or any other body part near a windlass or bow roller in operation.

4.3.2 Fresh water system

You can choose to equip your boat with a fresh water system as an optional extra.

The fresh water system consists of a fresh water tank and pump. The boat may also be equipped with a water supply point in the toilet, under the seat, and in the deck shower.

The tank is located under aft deck. The pump is integrated in the tank. The fresh water tank is filled via the inlet pipe on the aft foredeck.

The fresh water system is turned on by switching on the fresh water pump. The pump switch is located on the fuse panel.

The system maintains a working pressure automatically, which is why the pump does not need to be shut after use.

Switch the system off when leaving the boat. Do not forget to check filter in the pump regularly.

The dealer is responsible for disinfecting the fresh water tank before sale.

NOTICE

The water from the system is not meant for drinking.

The fresh water system must be thoroughly emptied for winter storage.

It is not recommended to use any anti-freeze products in the fresh water system.

© 2026 Axopar Boats

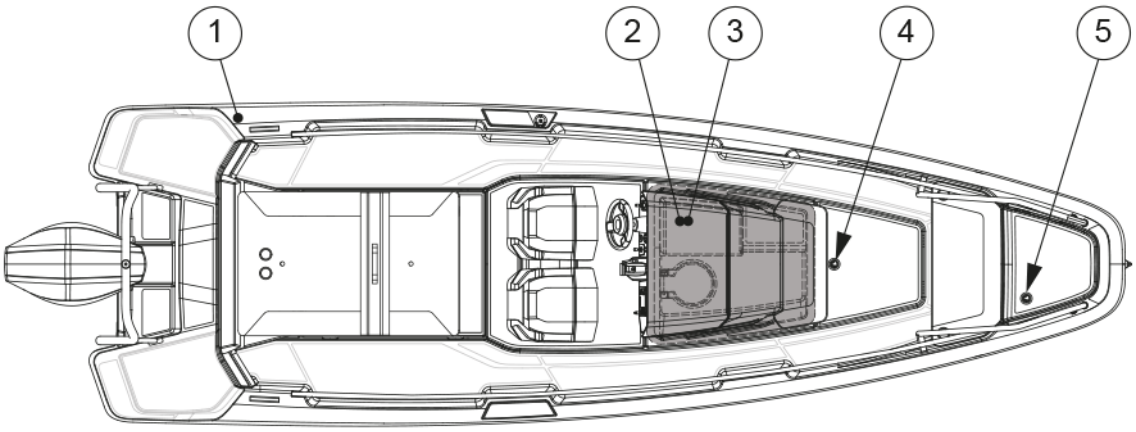

(1) Deck shower
(2) Toilet tap
(3) Freshwater pump switch
(4) Water tank and pump
(5) Water inlet fitting

The water pump has also two LEDs indicating the operating status and faults in the pump operation. For more information about the signals, please refer to manufacturer's manual.

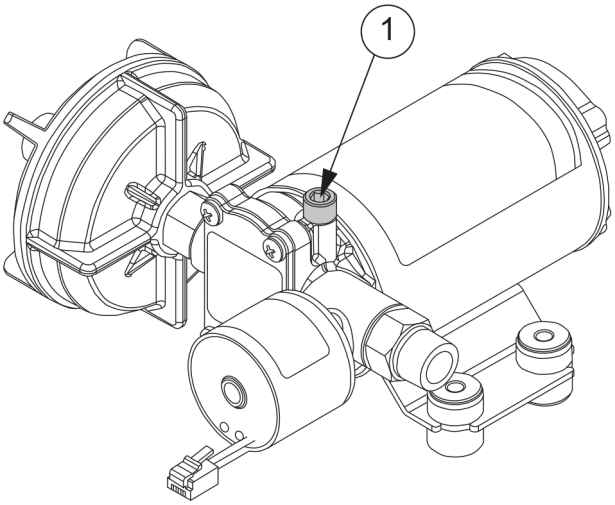

Figure 4.1 Water pump and air release valve

Freshwater system needs to be disinfected and flushed annually or after longer periods of non-use to keep the system in working order.

Disinfection procedure is described below:

1. Flush the entire system thoroughly by running potable water to flow through it.
2. Drain the system completely.
3. Fill the entire system with disinfecting solution and follow the manufacturer's instructions.
4. Drain the entire system once disinfection process is complete.

© 2026 Axopar Boats

5. Flush the entire system thoroughly several more times with potable water.
6. Fill the system with potable water. Freshwater system is now ready to be used.

Maintenance

Annually inspect hose connections, tube fittings and pump electrical wiring connections for proper securing and no chafing. Water pump inlet filter is recommended to be checked and cleaned annually. Running the system regularly helps keep the water pump’s impellers in working order.

4.3.3 Septic system

The boat's septic system consists of the toilet seat, the septic tank and the related systems.

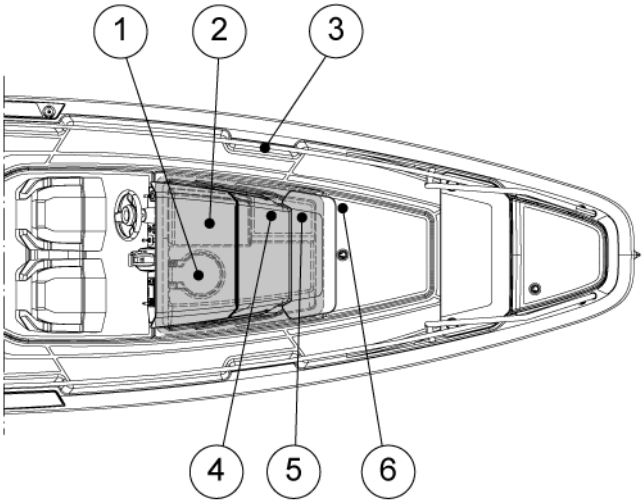

(1) Toilet seat
(2) Septic tank
(3) Septic macerator
(4) Toilet flush water inlet and septic tank seacock
(5) Toilet seat pump
(6) Septic tank suction fitting

Maintaining the macerator

The macerator pump can get stuck if it is not used for extended periods of time. Regular use of the macerator helps to prevent this from happening.

If the macerator pump gets stuck, please contact your dealer for repairs.

4.3.3.1 Toilet seat

© 2026 Axopar Boats

NOTICE

- Never put any other objects but toilet paper in the toilet.
- In order to avoid damages, you must also not pour hotter than lukewarm water into the toilet.
- It is under no circumstances allowed to flush paper towels, fabric or rubber products, hard objects, oil products or solvents down the toilet.

Using the electrical toilet

The electrical toilet is used with a separate operating switch. For more information on the device, see the manual for the toilet.

Maintaining the toilet

- Clean the toilet with a mild cleaner.
- Never use cleaning agents or deodorants which contain pine oil, formaldehyde or chlorine, nor corrosive or petroleum-based agents.

  These materials can damage the plastic and rubber parts in the toilet.
- Lubricate the pump shaft with Vaseline to increase the service life of the seal.
- Flush the toilet system thoroughly with fresh water when the boat is not in use.

4.3.3.2 Septic tank

Avoid environmental pollution!

The blackwater tank is fitted with a deck outlet pump using an international standard type connection. Using the pump, the black water can be emptied to a permanent septic tank ashore. These facilities must always be used.

In areas where there are no permanent septic tanks, the macerator is used to evacuate the contents of the tank straight into the water as follows: Open the sealed seacock. If possible, empty the tank daily and always in deep waters far from the shore. For the location of the pump, see the section ***Septic system***.

The shut-off valve must be closed after the evacuation.

Do not allow the tank to become full. It can lead to paper becoming compacted in the bottom of the tank, making it more difficult to empty.

NOTICE

Before the boat is laid-up for winter storage, the whole system must be cleaned and flushed thoroughly while the boat is still in the water.

The whole system must be thoroughly drained of water when the boat is lifted out of the water.

This measure prevents frost damage, bacteria growth and smells.

Use of antifreeze is not recommended, since it is impossible to guarantee that it reaches all parts of the system.

© 2026 Axopar Boats

4.3.4 VHF equipment

VHF radio allows instant communication between your boat and other boats, marinas, bridges, and maritime authorities.

The VHF radio is the recommended means of communication on the coastal waters, and it transmits messages on high frequency waves. The VHF system consists of a VHF radio unit near the drivers position and a radio antenna located either on the mast or on the roof of the boat depending on the boat model.

Study the provided booklet for the local regulations and the functionalities related to the use of the VHF system.

For your safety, make sure the VHF system is operational before going out to open sea.

4.3.5 Anchor windlass

Operation

To operate the windlass, windlass breaker must be switched on.

Windlass is operated with a momentary switch. Pushing the up button will raise the anchor and pushing the down button will lower the anchor.

If there is a loss of power to the windlass, check the windlass breaker to see if it needs to be reset. If the breaker keeps tripping after it has been reset, the anchor windlass system is recommended to be inspected by a qualified electrician.

The anchor windlasses are powered by the Aux battery. The battery and its fuse are located in the bow of the boat.

⚠ WARNING

- Do not touch the anchor windlass or its fuse if the main switch Aux is switched on.
- Even if the current is switched off, do not change the windlass fuse. The high current may cause a fatal electric shock.

Manual operation

In case of loss of power, the windlass can be manually operated by disengaging the clutch. Please refer to the manufacturer’s manual how to operate the windlass manually.

Before using the anchor windlass

Always check that:

- The windlass is in working order.
- The anchor chain can move freely.

© 2026 Axopar Boats

- The anchor and the chain cannot damage the boat when lowered.
- The anchor and anchor chain cannot hit any person.

For more information, see the manufacturer's manual.

While under way

The anchor windlass must be fixed mechanically to prevent it from coming loose when the boat is moving. For more information, see the manufacturer's manual.

⚠ WARNING

Pinching hazard

Never put your hand or any other body part near a windlass or bow roller in operation.

⚠ WARNING

If the windlass loosens when the boat is moving at great speed, it may cause great damage to the boat, its passengers and outsiders.

- Always fix the anchor windlass mechanically in place before getting under way.

⚠ WARNING

- Keep all body parts and clothing away from an activated windlass.

NOTICE

- Do not use the windlass to pull or tow another vessel.

Maintenance

Salt deposit accumulating on the windlass should be washed away with fresh water regularly to prevent corrosion. For more information, please refer to the manufacturer's manual.

© 2026 Axopar Boats

5 Transportation

5.1 Lifting the boat

Lift the boat only with a lifting beam and lifting straps. Use the specified locations for the lifting straps.

Commission only a reputable lifting company or a boat yard with sufficient lifting capacity to lift the boat. Make sure the company has full insurance cover, in case of any damages.

⚠ DANGER

Risk of serious injury or death by falling load.

- Do not stay under the boat when it is hanging in the crane.

Lift straps may slip on the hull. When appropriate, tie the straps together before lifting.

The position of the straps may need to be adjusted depending on how the boat is loaded.

In addition to the boat's own weight, take into account the equipment and other possible loads in the boat.

⚠ CAUTION

Note the location of the log transducer to avoid damaging it.

- Protect the hull sides well to avoid damages.

The lifting beam must be exactly the same width as the boat. Always take great precautions near and around the boat when lifting.

⚠ CAUTION

Risk of damage to the hull.

Do not lift the boat with a forklift.

The location of the lift straps is indicated in the figure.

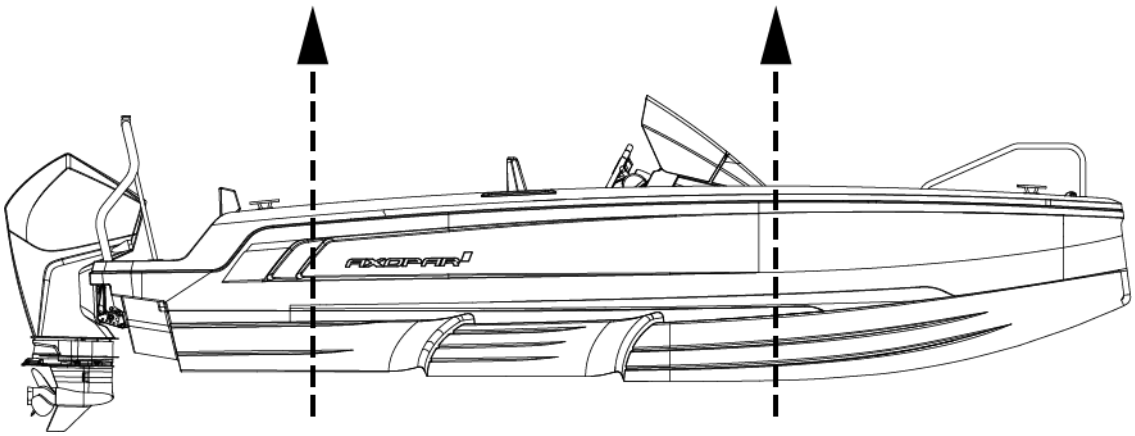

© 2026 Axopar Boats

Before operating any lifting equipment:

- Check and determine applicability of federal, state, or local requirements.
- Follow the lift equipment manufacturer’s requirements and recommendations.
- Check the boat's lift points, weight and other information.
- Straddle lift operation is a highly technical area that requires trained and experienced operators.

During lifting:

- Check the boat for bilge water before lifting.

  Excessive quantities of bilge water can shift, changing the balance of the load.
- Check for thru-hull appendages such as knot meters and stabilizers, rub, spray, and splash rails, so that they are not damaged by the lifting equipment.
- Check the hull structure to locate shafts, rudders, struts, and the forward and aft ends of any keels.
- Check the hull’s structural configuration, including the location of bulkheads, stringers, motors, and tanks.
- Check bilges for water ingress following launch.
- Transport the boat as close to the ground as practicable.

5.2 Transporting and storing the boat

Before lifting the boat onto the trailer, make sure that the trailer is suitable for the boat.

Make sure that there is a sufficient number of supports to distribute the weight properly without excessive point loads, and the capacity and dimensions of the trailer are sufficient to carry the boat and its motors, equipment, battery, boating accessories and fuel on board. Pay special attention to exposed areas and edges of hull, such as spray rails and steps in the hull, during loading, deloading and transportation.

⚠ WARNING

A boat trailer that does not have sufficient capacity or that is poorly maintained can become damaged and cause a danger on the road.

- Make sure that the trailer capacity is sufficient to also carry the weight of the motors, fuel and equipment.

⚠ CAUTION

The hull of the boat can be damaged if there is an insufficient amount of supports on the trailer or during the storage.

The trailer must be a little nose heavy. Make sure that the boat is securely fastened to the trailer, that it cannot move into any direction, and that the side supports provide an even support for the weight of the boat.

Before loading the boat on the trailer:

- Remove any unnecessary weight from the boat.
- Drain the bilge water.
- Adjust the side supports of the trailer so that the most weight rests on the keel supports, and the side supports only offer lateral support.

© 2026 Axopar Boats

- Protect the boat by placing suitable padding between the tie down straps and the boat, if necessary.
- See the motors manual for any instructions on trailering.
- Make sure that the doors and hatches are properly closed.
- Pay attention to any equipment and accessories in the boat during trailering.
  - Make sure you secure all loose items in the boat.
  - Do not use a hood, canopy, tonneau cover or other similar top or cover on the boat during trailering.

    These hoods and covers can become detached at high speeds and damage the boat and cause a danger to traffic.

    A hood or other cover flapping in the wind during trailering can damage the boat surface.
  - Keep the hood in its dedicated storage compartment during trailering, or remove the hood completely, if necessary.

Boat storing

- Make sure that the bow is slightly elevated when in storage, to help potential water escape the deck.
- Make sure the boat is steadily positioned and secured. The weight of the boat needs to rest on the keel.
- Protect the areas of the hull and deck being supported with some form of padding.
- Keep the engines in a downward position.

© 2026 Axopar Boats

6 Operation

The boat owner must take local and international regulations into consideration concerning the boat crew, equipment and handling of the boat. In some countries, a driving license or a separate authorization is required for driving the boat. Special regulations may also apply.

Ensure that the anticipated wind and wave conditions do not exceed the design category of the boat, and that the crew is able to handle the boat in these conditions. Even though the boat is designed for such conditions, they can still be very dangerous. Only a capable, fit and trained crew, using a well maintained boat, can satisfactorily operate in such conditions.

If the boat is fitted with a life raft, carefully read its operation manual. Onboard, the boat must have the appropriate safety equipment according to the boat type and weather conditions. This equipment is compulsory in some countries. The crew must be familiar with the use of all safety equipment and the most important actions in different emergency situations. Sailing schools and clubs regularly organize rescue drills.

The equipment in the boat may differ from the equipment used in the figures in this manual. This might be due to any optional equipment chosen or modifications made after producing this manual. In such cases, contact your local dealer for the operation instructions and additional information regarding the operation of the equipment in question.

Always maintain the boat properly and make allowance for the deterioration that occurs over time and as a result of heavy use or misuse of the boat. Any boat, no matter how strong it may be, can be severely damaged if not used properly. Inappropriate use of this boat not compatible with safe boating is not allowed. It is always important to adjust the handling of the boat to the sea conditions and own boating experience. The gelcoat parts, especially the colored parts, need to be polished and waxed approximately every fourth months to prevent the parts from fading or getting other visual defects.

6.1 Handling devices

6.1.1 Steering console

The controllers are situated so that the driver can easily manage them from the steering console.

The location and quantity of the devices depend on what optional equipment and motor models have been chosen. See the device manuals for further information on the devices.

© 2026 Axopar Boats

(1) Chart plotter
(2) Steering console switch panel
(3) Motor remote control
(4) USB charging port
(5) Trim tabs joystick
(6) Audio system remote control
(7) Emergency stop
(8) Bow thruster control

6.1.2 Steering console switch panel

Here you can see details on the steering console switch panel.

© 2026 Axopar Boats

Steering console switch panel in the dual battery system

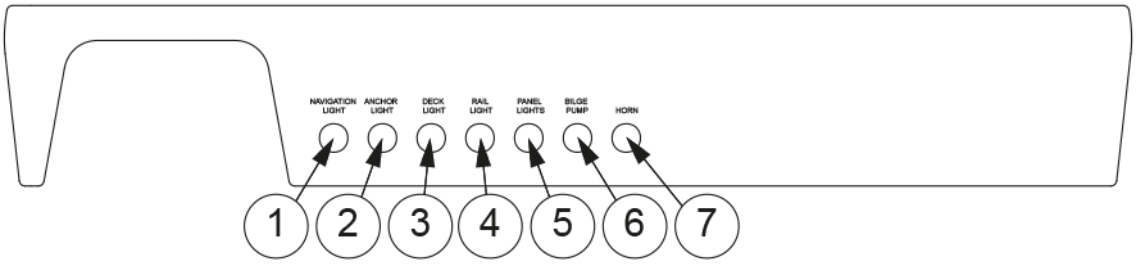

(1)	Navigation light
(2)	Anchor light
(3)	Deck light
(4)	Rail light
(5)	Panel lights
(6)	Bilge pump
(7)	Horn

6.1.3 Steering system

The steering system is one of the most vital systems related to safe boating.

The boats are equipped with a hydraulic steering system with the alternatives of power steering and non-power steering systems. Please refer to the collateral manuals provided by the outboard motor and steering system manufacturer included in the manual package provided with the boat.

The non-power steering system consists of a steering wheel, a helm pump, a hydraulic hosing, and a hydraulic steering cylinder.

The power steering system includes a steering pump to help with the handling of the vessel.

6.1.3.1 Checking and topping up oil

Effective and properly working steering is crucial for the safety of the boat.

- Check the oil level in the pump before casting off.
- For detailed instructions and the steering system oil recommendation, see the manufacturer's documentation.

6.1.3.2 Steering maintenance

For the regular maintenance of the steering system components, please refer to supplier’s manual.

If you encounter issues beyond regular maintenance needs, please contact your boat dealer immediately for service.

© 2026 Axopar Boats

6.1.3.3 Electric motor lever

The electromechanical lever is used to control the motor’s RPM and shift which affects the speed of the boat.

For detailed guidelines about safe boating and component maintenance, please refer to the provided outboard motor literature.

If you encounter issues beyond regular maintenance needs, or if noticeable failures occur, please contact your boat dealer immediately for service.

⚠ WARNING Always make sure no one is close to the propeller when engaging the propeller. Acknowledge the information provided on the helm's warning labels.

Use of lever

The lever has three modes: normal drive, trolling mode and disabled. All modes are selected with the **N** button.

- To engage the motor's forward gear and propel the boat forward, push the lever forward.
- To reverse the direction of the boat, pull the lever back.

Adjusting the lever further in one direction increases the boat's speed.

To engage/disable throttle:

1. Move the control lever to the neutral position. Neutral indicator lamp will light steady green.
2. Press the **N** button. Neutral indicator lamp will flash green to indicate that throttle is disabled.

To engage/disengage Trolling Mode:

1. Move the control lever to the forward idle or reverse idle position.
2. Press the **N** button. The lamp will flash green slowly to indicate that trolling mode is engaged.

⚠ WARNING Always make sure no one is close to the propeller when engaging the propeller. Acknowledge the information provided on the helm's warning labels.

⚠ WARNING Never step onto the swim ladder when the motor is running. Stop the motor while the steering and propeller are being inspected.

⚠ WARNING Do not operate this boat with a motor that exceeds the maximum motor power recommended by the manufacturer.

6.1.4 Starting

1. Turn on the motor system (Evoy) main switch and the service battery main switch.
2. Enter the pin code in main screen, if it is required.

© 2026 Axopar Boats

3. Wait for the motor systems (Evoy) to activate and for the display of motor and battery information on the main screen.
4. Check that the dead man's switch is connected properly to the boat.
5. Check that electric motor lever is in neutral position and neutral indicator lamp light is steady green. Now motor is ready.

Motor does not make any sound while starting.

⚠ WARNING Never step onto the swim ladder when the motor is running. Stop the motor when the steering and propeller are being inspected.

⚠ WARNING Do not operate this boat with a motor that exceeds the maximum motor power recommended by the manufacturer.

6.2 Swivel seat - Driver and passenger seats

The driver and passenger seats are operated with locking handles.

⚠ DANGER The locking handles must be in the locked position before the boat speed exceed 5 knots.

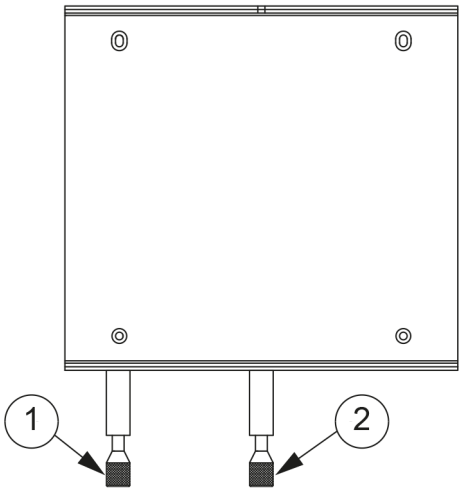

(1) Rotation locking handle
(2) Moving locking handle

© 2026 Axopar Boats

- For the rotating function, press the locking handle down to release the lock.

  This allows you to rotate the seat on the post.
- For the moving function, lift the locking handle up to release the lock.

  This allows you to move seat from back to front.

6.3 Inspecting the boat

Due to safety reasons, the below listed inspections must be carried out before and after using the boat.

6.3.1 Checklist: Regular inspection before leaving harbor

Safety

Make sure that:

- All the people onboard have life jackets.
- The wind and wave conditions do not exceed the design category of the boat.
- The emergency stop lanyard is attached to driver.
- There is a fire extinguisher (or several) onboard and their approval/inspection date has not expired.
- The needed ropes and anchor are onboard.

Draining and tightness

Check that:

- There is no water in the bilge.
- All the bilge pumps are functional.
- The bilge has no signs of cooling liquid leaks.
- All deck hatches are tightly closed.

Electrical and motor

Check that:

- All the fuses are intact.
- The main switches are switched on.
- The batteries have enough power.
- The motor works properly.
- The motor cooling water flows as expected

6.3.2 Checklist: After using the boat

Make sure that:

- The main switches are switched off.
- The septic tank discharge valve is closed.

© 2026 Axopar Boats

- There is no water in the bilge.
- The bilge pumps are functional.
- The deck draining works properly and all the draining valves are open.
- All deck hatches, roof canvas and doors are tightly closed.

6.4 Handling the boat

6.4.1 Checklist: Boat handling before leaving harbor

For safe navigation under all weather conditions, proper sound signaling equipment in compliance with regulations (COLREG, 1972) must be carried on board. Make sure that the sound signaling equipment on the boat is compliant with these regulations.

⚠ CAUTION According to national regulations in some countries, it is a legal requirement to wear a life vest at all times.

- Check that the boat and its equipment are in seaworthy condition.
- Always listen to long-term weather forecasts when planning longer trips.
- Always make sure there is enough freshwater in the tanks.
- Always make sure that the charging level of the battery is adequate for the whole trip. When the charging level of the battery decreses, so does the available power. You should reserve at least 20% extra for a trip.
- Check that all items on board are properly stowed and adequately secured to manage rough sea and wind conditions.
- Make sure that the swim ladder is raised out of the water before moving off.
- Make sure that the steering is correctly positioned before starting.
- All persons on board must wear an appropriate life vest when on deck.

6.4.2 Leaving the jetty

Before casting off, consider how to best leave the jetty.

- Check what the wind direction is.
- If the boat has two motors, move away from the jetty by engaging the motor nearer the jetty astern at idling speed and engaging the other motor ahead at idling speed on.
- The boat will swing out from the jetty astern. As the bow will move against the jetty, fend off properly.

With only one motor this can be a little more challenging, especially if the wind is pressing the boat firmly against the jetty, you have to use a spring to get the stern out.

- Firmly fend off the bow from the jetty.
- Take a line from the bow around a bollard or cleat, so that it can be easily let go.

© 2026 Axopar Boats

- Engage idling speed ahead and turn the rudder so that the stern glides out from the jetty.
- When the boat has reached a position, where it can safely be reversed, release and retrieve the line, quickly center the rudder and engage astern.

⚠ CAUTION Gather in all lines and fenders while you are still in sheltered water. A rope around the propeller can disable a boat.

6.4.3 Driving the boat

Going out in a motor boat involves responsibility not just to those on board, but also to others we meet on the water. Showing consideration for others makes boating comfortable. Everyone has the same right to be at sea, whatever kind of boat they go afloat in.

The physical laws that apply to a boat are rather different from, for example, those affecting a car, as are the possibilities of controlling it.

You can influence a boat's behavior and the level of comfort on board primarily by adapting the speed to the prevailing sea conditions and by the intelligent use of the trim tabs. A planing boat rides almost level in the water at maximum speed. As the speed of the boat is reduced the trim angle increases and the bow rises slightly. This is normal, and is a prerequisite for good performance.

6.4.3.1 Emergency stop

If the boat is equipped with an emergency stop, attach its lanyard to yourself immediately after detaching the mooring lines. For more detailed instructions, see the motor manual.

It is very important that the boat stops if you for some reason fall overboard or stumble on board, particularly if you are alone. However, remember to detach the lanyard from your wrist before docking or beaching operations to prevent the motor from stopping unintentionally

6.4.3.2 Driving at high speed

Although the boats have passed the CE requirements for swerve tests at full speed, Axopar Boats does not recommend making sharp turns at high speed. When exceeding a certain speed limit any hull construction might lose its grip. This might lead to passengers hurtling out of the boat, especially in a single motor configuration.

- Do not use the boat if it has an motor with a higher power rating than indicated on the capacity plate.
- Do not drive the boat at high speed if the motor's rig angle is negative (bow down).
- Do not drive at full speed on congested waterways or if the visibility is limited because of weather conditions or waves.
- Reduce your speed and wake as a matter of courtesy, and also for the safety of yourself and others.
- Observe and obey speed limits and prohibitions associated with a swell.
- Follow the rules of navigation and the requirements of COLREG (Convention on the International Regulations for Preventing Collisions at Sea).
- Always make sure that you have the space needed for avoiding collisions and coming to a halt and for evasive maneuvers.

© 2026 Axopar Boats

- Always use an emergency stop if available.
- Reduce speed in high seas for increased comfort and safety.
- Learn the boat's speed potential. Utilize this knowledge for economical and safe cruising.
- Avoid using high speed along with large rudder movements when going astern, because that places great strain on the rudder and steering mechanism.
- Avoid sudden steering maneuvers at high speeds.
- Avoid staying in the bow area when driving at high speeds.

Avoid sudden changes in travel direction at high speed. Let the boat come to a stop, and the motor rev down before shifting between forward and reverse. Otherwise excessive strain is put on the motor, which could cause the motor to stop. In the worst case, sea water may enter the motor.

A right-handed propeller rotates clockwise and a left-handed propeller anti-clockwise, seen from the stern. The rotation of the propeller is critical for steering the boat. The right-handed propeller pushes the stern of the boat to starboard when the motor is engaged ahead and to port when it is going astern. The direction of rotation of the propeller has a major impact on the turning radius. A right-handed propeller gives a smaller turning radius to port than to starboard. This is called the propeller's paddlewheel effect.

The boat's propellers have considerable propulsion power that provides powerful acceleration. Take this into consideration to avoid dangerous situations arising from this.

⚠ DANGER

A revolving propeller is life-threatening to a swimmer or a person who has fallen overboard.

Use the emergency stop and turn off the motor when someone is climbing on board.

6.4.3.3 Driving in rough seas

Never go out in rough seas, if you are uncertain whether the boat and those on board can cope. Follow these simple rules.

- Be well prepared.
- Remember to secure loose equipment.
- Always have a sea anchor and other emergency equipment easily accessible.
- Avoid breaking seas that can appear close to land and over shallows.
- If there are significant waves, always reduce speed to guarantee the safety of the persons on board.
- Use the trim tab to trim the bow down to reduce hull slamming in a head sea.

In a head sea

- Adjust speed to suit the size of the waves.
- Adjust the trim angle to the size of the waves. Avoid taking seas beam on.

In a following sea

Remember to keep the bow high in a following sea. Avoid crashing through waves, maintain low speed. If necessary, deploy the sea anchor to reduce speed.

Planing boats can be particularly exposed in rough following seas. The stern of the boat rises and the rudder does not answer, so the boat broaches while the bow cuts down into the sea.

© 2026 Axopar Boats

6.4.3.4 Maneuvering in narrow channels

When maneuvering the boat in narrow channels, the motor speed must be kept as low as possible so that maneuvers are calm and steady.

In difficult wind and current conditions, more revs might be necessary to make full use of the power of the motor. In these conditions, it is important that maneuvers are made quickly and precisely to prevent the boat from drifting into trouble for example.

A good rule before starting a maneuver under difficult conditions, is to think through the different situations which could arise. Pay attention to the wind and current conditions and decide in advance which maneuver you will make. It is also important to brief crew members on what they need to do in different situations.

Always keep in mind that the stability of the boat may be reduced when towing.

⚠ CAUTION Even a nonslip molding can be slippery to walk on when the deck is wet.

6.4.4 Visibility from steering position

The International Regulations for Preventing Collisions at Sea (COLREG) demand that a proper lookout is kept at all times, and the *right of way* rule is followed.

The following factors can considerably reduce visibility, among other things:

- Gear trim angle
- Trim tab angle
- Load and load position
- Speed
- Rapid acceleration
- Changeover from displacement speed to planing
- Sea conditions
- Rain and thunderstorms
- Darkness and fog
- Inner lighting when under way in the dark
- Position of curtains
- People and equipment that block the driver's view.

If boat is driven under clear planing speeds, visibility of operator may be blocked by bow. Use of trim tabs and engine trim may be used to lower the bow.

⚠ WARNING Visibility from the seated position is limited. Maintain lookout and control the trim of the boat if needed.

⚠ WARNING Make only small adjustments to trim tab positions at a time. Holding down the button for the trim tab for any length of time can result in partial loss of control of the boat.

© 2026 Axopar Boats

⚠ WARNING Visibility from the seated position at the helm station is limited. Avoid serious injury or death from collisions. Operation from a standing position may be necessary to maintain lookout as required by rules of the road.

6.4.5 Using the trim tabs

A boat does not need trim tabs to get up on the plane or to give good performance. However, trim tabs are a very useful aid when used correctly.

There are two situations in particular where the trim tabs need to be used:

- When it is desirable to trim the bow down in a rising sea and at speeds between going up planing and cruising speed.
- When running with a strong beam wind.

A planing boat always leans into a strong side wind. This reduces the boat's seakeeping qualities, which is why listing to one side needs to be eliminated as far as possible. Lowering the trim tab on the windward side brings the boat back into normal attitude.

For trimming the bow down, both trim tabs are used in parallel. Begin by retracting both trim tabs completely, then lower both of them a little at a time, so that you retain complete control over how the boat is affected. When running with a following sea, both trim tabs always need to be fully raised. The reason for this is that boats have a tendency to "dive" in a strong following sea, which can result in uncontrollable slowing. Therefore you must run the boat with a high bow angle in a following sea.

6.5 Preventing falling overboard

The boat's working decks are areas where people can move about when the boat is being maneuvered.

The working deck area is shown in grey in the figure.

With U-sofa

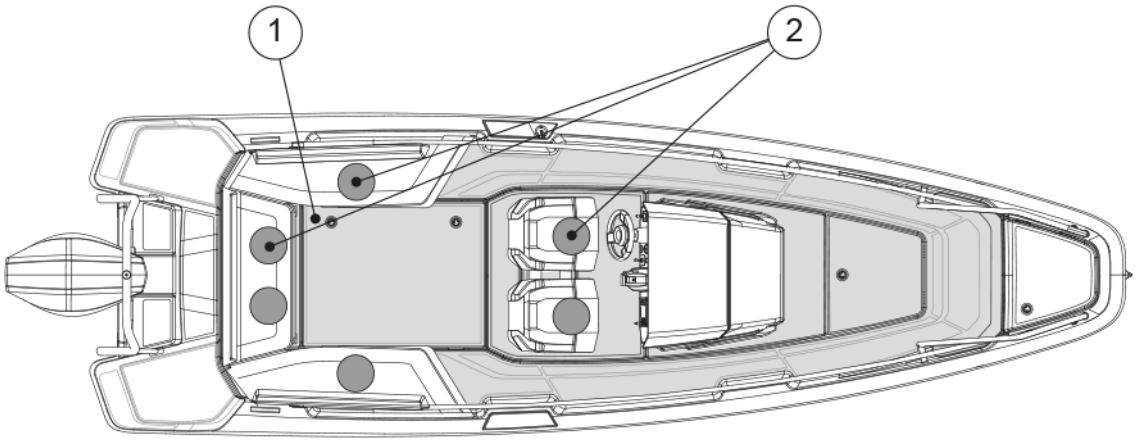

With multistorage compartment

© 2026 Axopar Boats

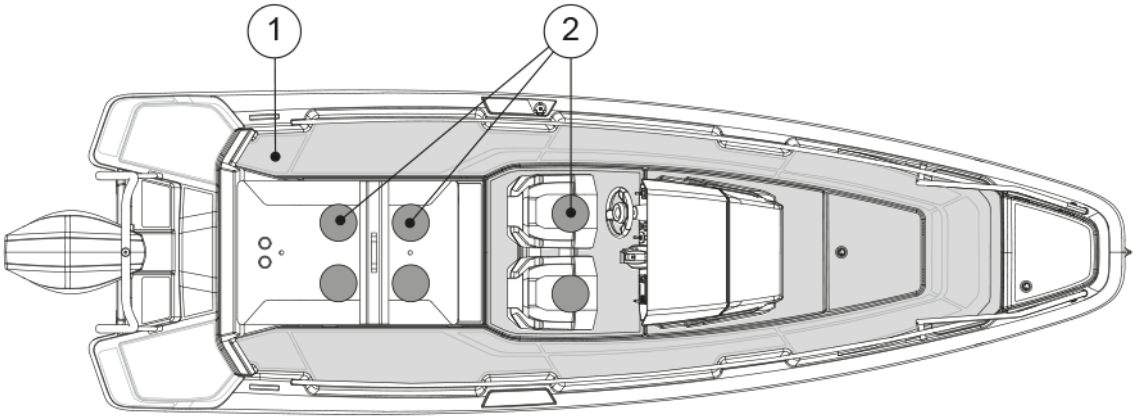

(1) Working deck area
(2) Seats

Do not sit, stand or spend time in other parts of the boat while the boat is under way.

Moving about in the aft part of the aft deck and on the front deck while the boat is under way is not recommended.

If a person has fallen into the water, the easiest way to get back on board is to use the swim ladder. The ladder can be pulled down also from the water.

Staying on deck

⚠ WARNING Staying in the bow of the boat is not recommended in speeds exceeding 30 knots.

⚠ DANGER A revolving propeller is life-threatening to a swimmer or a person who has fallen overboard.

- Use the emergency stop.
- Turn off the motor when someone is climbing on board.

If the sun deck cushions or the front deck table are in place, observe the maximum speed of 15 knots to avoid the cushions or table detaching at speed or in high waves.

6.6 Anchoring, docking and mooring

6.6.1 Fastening points

Fastening points (or cleats) are located both at the stern, midship and bow.

© 2026 Axopar Boats

- When anchoring or towing, the forward force is 32.2 kN.
- When mooring the forward force is 26.3 kN.
- When mooring the rearward force is 22.5 kN.

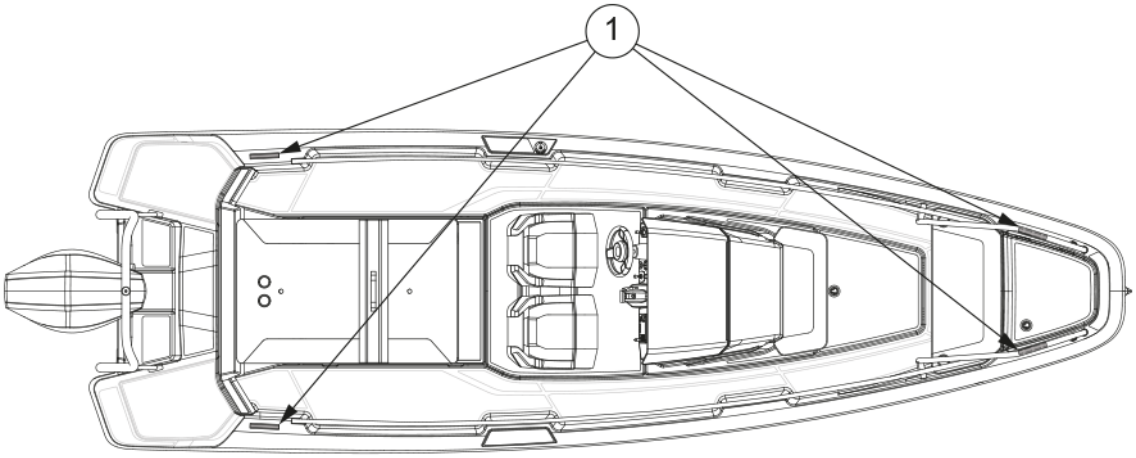

(1) Fastening points

6.6.2 Docking

Always brief your crew how you are planning to dock. Fenders and at least one mooring line fore and aft must be in place before approaching the jetty.

It is always easiest to dock against the wind. Try to hold the bow exactly into the wind and maintain sufficient speed for the boat to answer the rudder. If the bow is blown off in one direction, back out and repeat the maneuver. Bring the bow up to the jetty, and make sure you get a line ashore quickly.

Docking with a side wind is a little more difficult. Do not steer parallel to the jetty letting the boat blow in as there is always a risk of the bow being blown off towards other boats or the jetty. Instead, try to maneuver the boat so that the wind comes directly from astern. Then the boat can be maneuvered straight ahead since the wind helps hold the boat on a straight course. It is good to have someone on the foredeck that can go ashore and quickly turn the bow in the desired direction after the boat has stopped completely.

Try to always avoid sharp movements of the throttle, since idling speed in ahead and astern is generally adequate. Sharp movements of the throttle can lead to panic maneuvers.

⚠ CAUTION The tensile strength of the lines or chains should normally not exceed the strength of the fastening point in question.

6.6.3 Checklist: Before anchoring

1. Check the chart to see if anchoring is permitted in the area.
2. Listen to the weather forecast for the area and take note of the expected wind conditions.
3. Switch on the echo sounder.

© 2026 Axopar Boats

4. Study the seabed conditions and make sure that there is good holding ground.
5. Check that the safety chain has been released from the anchor.
6. Wait until you have reached the intended anchoring point before lowering the anchor.
7. Let out the anchor line equal to at least three times the depth of the water.
8. Put the motor in astern to check that the anchor has taken hold (only when bow anchoring).
9. Note your position on the GPS. Regularly check that the boat has not moved from its position.
10. Set the echo sounder to “Anchor Watch”.

⚠ WARNING Always fix the anchor in such a way that it is securely fastened onto the boat. An anchor that falls off when under way may cause serious damage to the boat and mortal danger to the crew.

6.6.4 Towing and mooring

⚠ CAUTION When towing another boat or being towed, always drive slowly. If the boat you are towing is of the displacement hull type, never exceed its hull speed.

- Always attach the tow line so that it can be detached under load. It is the owner’s and users' responsibility to ensure that the mooring lines, towing lines, anchor chains, anchor lines and anchors are adequate for the vessel’s intended use.
- Always remember that the stability of the boat may decrease when being towed.

© 2026 Axopar Boats

7 Maintenance

7.1 Cleaning and maintaining the gelcoat surface

The gelcoat surface of the boat is subjected to environmental conditions which can, under certain circumstances, lead to deterioration of the surface. Overtime, these external factors such as saltwater, high UV exposure and temperature variation, can have an effect on the gelcoat surface.

Generally, gelcoat should last 3 years without showing any significant signs of yellowing, chalking, or other deterioration in typical conditions.

NOTICE

Clean and maintain regularly all the gelcoat surfaces on the boat.

If the regular cleaning and maintenance is neglected, or if the boat is exposed to certain environmental conditions where it is berthed, deterioration of the surface finish such as fading, discoloration and brittles may become visible over time.

- Wash and clean the boat after every trip, and weekly if it is stored outside uncovered.
- Wax the boat twice a year if used all year, otherwise annually.
- Inspect the gelcoat surface annually for signs of deterioration, such as brittle surfaces or changed color tones.
- Small scratches or discolorations can be fixed by buffing or polishing.
- Severe scratches, discoloration or oxidation may require wet sanding before buffing, polishing and vaxing.

  Wet sanding is recommended to be performed by your Axopar dealer or a trained professional.
- When the boat is not in use, keep the gelcoat surface out of the sun or cover the boat with a canvas tarpaulin.

  Do not use plastic or other non-porous materials, which can trap moisture between the cover and the surface.

Washing

NOTICE

Use a cleaning product specially made for boats. Do not use household cleaning products, chlorine, acids or similar as they may damage the boat surface due to their improper pH value.

Wash the boat after every trip by using a mild cleaning product. Dilute the cleaning product with fresh water according to the instructions on the product label.

1. Rinse the deck and hull with fresh water to remove loose dirt.
2. Wash the surfaces with the diluted cleaning product and a soft-bristled brush.
3. Rinse off with fresh water.

Waxing

Waxing the gelcoat surface restores gloss and protects the finish. Only use wax recommended for gelcoat, and follow the product instructions carefully.

© 2026 Axopar Boats

Wax can either be applied by hand using a clean rag, or with an orbital-motion buffing machine.

NOTICE If using a buffing machine, do not exceed the speed of 1200 rpm. Using a higher speed may burn the gelcoat.

NOTICE Do not wax a gelcoat surface in direct sunlight.

1. Apply wax and wait for a few minutes until the wax looks dry.
2. Buff the wax either by hand using a clean rag, or by using a buffing machine.

   Buff in circular motions until the surface is clean and glossy.
3. Finish by wiping the potential wax residues off with a clean rag.

Polishing and buffing

Small scratches or discolorations can be fixed by polishing and buffing the boat. If the surface has severe discoloration or oxidation, wet sanding is recommended before polishing and buffing.

- Polishing compounds remove small scratches and discolorations.
- Buffing compounds contain abrasive and remove deeper scratches or oxidation.

  Buffing compounds can be used, for example, to remove scratches on the hull caused by the fenders.
- After using the buffing compound, use polishing compound to achieve the best possible finish.
- Follow the product instructions of the compound carefully.

Polishing and buffing compounds can either be applied by hand using a clean rag, or with an orbital-motion buffing machine with a polishing pad.

NOTICE When using a buffing machine, do not exceed the speed of 1200 rpm. Using a higher speed may burn the gelcoat.

NOTICE Do not polish or buff a gelcoat surface in direct sunlight.

1. Apply polishing or buffing compound on the surface and wait for a few minutes until the compound looks dry.
2. Polish or buff the compound either by hand using a clean rag, or by using a buffing machine with a polishing pad.

   Buff in circular motions until the surface is glossy.
3. Wax the surface.

Wet sanding

NOTICE Wet sanding is recommended to be performed by your Axopar dealer or a trained professional.

© 2026 Axopar Boats

Severe scratches, discoloration or oxidation of the gelcoat surface may require wet sanding. Wet sanding can be done either by hand or by using a machine.

NOTICE When using a machine, do not exceed the speed of 1200 rpm.

Using a higher speed may burn the gelcoat.

NOTICE Do not wet sand a gelcoat surface in direct sunlight.

1. Spray water to the area that needs to be sanded.

   NOTICE Keep the surface continuously moist while sanding.

2. Sand the surface with a 1000 grit sandpaper (for example Mirka Abralon).

   If you use a machine, use a low rpm speed to get the best result.

   Keep sanding until the entire surface is equally matt.
3. Sand the surface with a finer 1400 grit sandpaper.
4. Sand the surface once more with an even finer-grit sandpaper.

   This saves time in the buffing and polishing stage.
5. After sanding, when the surface looks equally matt, rinse the surface with fresh water and allow to dry.
6. Buff and polish the surface to get the gloss back.
7. Wax the surface.

7.2 Antifouling

Painting your boat's hull with antifouling paint is worth considering if your boat is most of the season in water.

Boats that are frequently lifted out of the water and relaunched during the boating season can be affected by antifouling oxidization. Out-of-the water, antifouling paint will oxidize, which will prevent the biocide release and slowly cause antifouling to lose its effectiveness. Follow the paint manufacturer's specifications for launching window.

Antifouling wears gradually over time, depending on factors such as the location where the boat is used and how often the boat is used. As a rule of thumb, antifouling lasts one season once applied. When the antifouling needs to be repainted, it is important to use the same antifouling paint as the existing antifoul, or to scrub off old antifouling paint down to gel coat. If different antifouling paints are used, there is a risk that the composition of the paints are incompatible, preventing the antifouling paint from working.

Contact your nearest Axopar dealer in antifouling repainting and condition inspection related matters.

© 2026 Axopar Boats

7.3 Maintaining the interiors

7.3.1 Plastic and painted surfaces

1. Wet the surface evenly with water before the actual cleaning.
2. Remove stains.
   - Remove regular stains with a brush and a lightly diluted cleaner.
   - Remove grease with a brush or a sponge and window cleaner.
3. Clean the surface afterwards with sponge and water.
4. Wipe dry with a piece of cloth.

7.3.2 Doors and hatches

- Clean the tracks of sliding doors and hatches regularly and lubricate, if necessary.
- Lubricate handles and locks with regular lock lubricant.

7.4 Maintaining the cover

New covers may leak initially, as the seams need to swell.

During use

To prevent quick deterioration of the cover, secure it tightly in a folded-up position to prevent flapping.

After use

NOTICE

- Hang to dry. Never use a drying cabinet or iron to speed up drying.
- Check that the cover is completely dry before stowing. Stowing a moist cover can cause mold damage.
- Store the cover in dry indoor conditions for the winter.
- The cover must not be stored in the boat.

7.4.1 Cleaning the cover

The cover needs to be thoroughly cleaned two or three times a year.

NOTICE Never use high pressure washers or chemical cleaning agents.

© 2026 Axopar Boats

1. Let the fabric cover soak for at least 24 hours.
2. After soaking, wash the inside and outside of the cover with a sponge or a soft brush.

   Use mild soapy water and plenty of water, max. 30°C.
3. Rinse thoroughly with freshwater.

   Mix 12% vinegar in the final rinsing water to neutralize the soap residues.
4. Hang the cover to drip dry.

7.5 Protecting underwater metal parts

Boat's underwater metal components, such as thru-hulls, seacocks, trim tabs, motor internal components and propellers, are subject to electrolytic corrosion. Electrolysis and galvanic corrosion (corrosion of dissimilar metals in salt water) can occur in marine environment due to external factors such as stray currents, polluted waters, or proximity of other vessels. It is important for boat owner to be aware of the phenomena, as they can cause serious deterioration over time.

Signs of electrolytic corrosion are, for example, white, powdery substance on exposed metal such as propellers or breakers, or thru-hulls and seacocks turning greenish. If the corrosion has progressed far, even deep pitting can appear on the part’s surface.

The boats are equipped with sacrificial anodes to protect the metal parts from galvanic corrosion. Additionally, boats equipped with shore power have galvanic isolators to stop low voltage currents from flowing through the boat.

All underwater metal parts need to be inspected annually for signs of corrosion. Additionally, underwater thru-hulls and seacocks are recommended to be replaced every 5 years. Please see the section ***Preventing corrosion*** for more details.

7.6 Preventing corrosion

Sacrificial anodes are installed on the boat’s trim tabs and motors to protect metallic parts from corrosion damage. The anodes need to be replaced regularly as they wear out to protect other metallic parts.

- Inspect the anodes monthly.
- Replace them when approximately fifty percent of the anode has deteriorated.

In general, anodes need replacement once a year in fresh water, and more frequently in saltwater environment. If there is an increase in the consumption speed, it can be a sign of electrical issue and the root cause should be investigated.

7.7 Preventing frost damage

- The bilge pump system is fitted with a water lock on the hose.
  - Detach the hose and fully drain the water from the water lock and run the pumps dry. Otherwise the pumps may freeze and break.
- Unscrew the frost plug on the underside of the shower fittings.
  - If there is no frost plug, unscrew the shower hose.
- Drain the water tank and all other components containing water in order to avoid frost damage.

© 2026 Axopar Boats

- Run the freshwater pump dry to drain out all the water.
- Make sure that no water remains in the boat under any circumstances. Leave the hatches in the cabin partially open.

7.8 Checklist: Before winter lay-up

- Wash the hull and bottom immediately after lifting the vessel out of the water.
- Wash all parts inside, also under the floorboards.
- Leave all lockers, drawers, and cabin and wardrobe doors open.
- Remove the carpets.
  - Store the carpets and cushions indoors in a dry place.
  - If this is not possible, make sure that the cushions are dry and position them on their side.
- Disconnect and service the fridge.
  - Switch off the power and disconnect the power supply.
  - Defrost the fridge.
  - Clean and dry the exterior and the interior of the fridge.
  - Empty and dry the condensate water tray.
  - Leave the door slightly ajar to enable ventilation.
  - Check the more detailed instruction in the manufacturer's manual.
- Ensure good ventilation in the boat.

NOTICE If the 12V batteries are left aboard, make sure they are fully charged, otherwise the batteries can freeze and crack.

7.8.1 High voltage battery

- Because there is a high voltage battery in the boat, you should store it in a protected and temperate environment (0-25°C).
- To prevent battery depletion and damage, keep the main battery at a 30% charge level with the service disconnect device removed.
- For short-term storage, charge the 12V battery and disengage the main switch.
- For long-term storage, disconnect the 12V battery.
- Do not store the boat in temperatures below -40°C or above 55°C, and keep it away from heat sources.
- If the boat is exposed to sub-zero temperatures, the seawater circuit must be flushed.
- For detailed information about high voltage battery and storing, see the motor manual.

© 2026 Axopar Boats

7.9 Checklist: Before launching

1. Remove the tarpaulin in good time before launching.
2. Wash the hull with a regular shampoo and a soft brush.
3. Wax the hull, if necessary.

   Use a standard boat wax.
4. If there are small scratches on the hull or if some of the surface gelcoat has lost its shine, use a rubbing compound on these areas before polishing.
5. Paint the bottom with antifouling paint.
6. If the batteries have been removed, put them back and check the electrolyte level in the cells.

   Check the condition of the batteries.
7. Check all cables, clamps, motor mountings and other fastenings.
8. Check the steering before launching.
9. Check the instrumentation.
10. Close all water drain plugs.
11. Check that the seacocks are tight and in order, check for any frost damage.
12. Check all pipes, hoses and cocks.
13. Make a note of any frost damage.

7.10 Maintenance log

Regular maintenance tasks are presented in the following table. If you feel confident enough, you can perform all these tasks yourself. If not, please contact your local Axopar dealer for help.

Depending on vessel model and components, every task might not be relevant.

© 2026 Axopar Boats

MAINTENANCE LOG	Frequency				
Task to be performed	Every trip	Every month	Every 3 months	Every 6 months	Annually
Bilge system - Remove, clean and inspect bilge pump, check valve and its surroundings for damage or debris that may reduce the performance of the pump	●				
Waste system - Replace the no-smell carbon filters					●
Waste system - Run the macerator pump					●
Heating system - Run the heater for 10 minutes		●			
Air conditioning system - Clean air filter, seawater strainer and check the system for leaks		●			
Water system - Clean inline filter			●		
Inspect Zinc anodes - Replace all zinc anodes if 50 % has been eaten up				●	
Fire extinguisher inspection					●
CO alarm - Push test button for 1 sec			●		
Smoke alarm - Push test button for 3 sec			●		
Seacocks - Turn handle Open and Close					●
Batteries - Charge state, terminals securely attached and free from corrosion					●
LPG system - Check condition of LPG lines, connectors and LPG shut off valve					●
Fuel system - Check condition of fuel lines, connectors and fuel shutoff valves					●
Inspect fuel tank compartment bilge for water				●	
Livewell pump - Check condition of hoses and connectors			●		
Gelcoat waxing				●	
Clean hull & deck from saltwater	●				
Keep bilge dry and clean	●				
Boat covers - Clean upholstery covers and sunroof cover				●	

© 2026 Axopar Boats

7.11 Corrective maintenance

7.11.1 Deposits

Mild detergents and fine rubbing compounds reduce the weathering and calcium deposits accumulated on the surfaces.

NOTICE Do not apply the rubbing compound in direct sunlight.

- Use only a fine grit compound, and follow the label instructions carefully.
- For the best result, wax the surface after treating it with the rubbing compound.

7.11.2 Scratches and nicks

Most scratches and nicks can be removed by using a rubbing compound followed by waxing.

7.11.3 Stains

Most stains can be removed by washing with a mild detergent.

- For stubborn stains, use a tine abrasive household cleanser followed by waxing to restore original luster.
- For non-water-soluble stains, such as grease, oil, and rubber heel marks, use a solvent such as acetone, rubbing alcohol, toluene or xylene, followed by a mild detergent.
    - If these solvents are not effective, try a rubbing compound or fine sanding followed by waxing.

7.11.4 Deep marks, gouges and holes

Deep marks, gouges and holes should be repaired professionally.

Gelcoats can be well repaired by professionals, and in most cases the repair will be undetectable.

NOTICE In cases where the damage has pierced the gelcoat layer, further exposure to water or chemicals should be avoided.

Failure to observe this precaution may result in extensive and potentially costly damage to the underlying laminate structure.

© 2026 Axopar Boats

8 Environment

When handling environmentally hazardous substances such as fuel, oils, solvents, grease, bottom coats, you need to consider the following:

- Always read the instructions for each product carefully and handle the product with care.
  - Make sure that the used packaging, cans and similar items are discarded in designated collection points.
  - If you are in any doubt whether the product is hazardous or not, contact the supplier or vendor of the product.
- The backwash from boats wears down the shoreline and creates problems for other boats near you.
  - Always adjust your speed to the situation and the surroundings to avoid unnecessary backwash.
- Always drive the boat at the most economical motor revs possible, taking the prevailing conditions into account, to avoid unnecessary emissions and noise.
- Make sure that the motor is properly serviced at regular intervals so that noise and emission levels are minimized.
  - Read the motor manufacturer's manual carefully.
- As a boat owner you must be aware of the local environmental laws, and respect codes of good practice.
  - Never empty the septic or blackwater tank into water.
  - Familiarize yourself with the international regulations on the prevention of marine pollution (MARPOL) and comply with these regulations.
- Always investigate the source of any oil leaks as soon as possible.
- Dispose of recovered spilt oil correctly.
- Keep oil-absorbing cloths or rolls on board.
- Never dispose of overboard any oil, paint or other chemical that is potentially harmful to the environment. Sanctions are in place in most parts of the world for those who disregard this rule!

⚠ WARNING Any oil must be treated as chemical waste.

8.1 Requirements for North America

The EPA standards state that in freshwater lakes, freshwater reservoirs or other freshwater impoundments whose inlets or outlets are such as to prevent the ingress or egress by vessel traffic subject to this regulation, or in rivers not capable of navigation by interstate vessel traffic subject to this regulation, marine sanitation devices certified by the U.S. Coast Guard installed on all vessels shall be designed and operated to prevent the overboard discharge of sewage, treated or untreated, or of any waste derived from sewage.

The EPA standards further state that this shall not be construed to prohibit the carriage of Coast Guard-certified flow-through treatment devices which have been secured so as to prevent such discharges. They also state that waters where a Coast Guard-certified marine sanitation device permitting discharge is allowed include coastal waters and estuaries, the Great Lakes and interconnected waterways,

© 2026 Axopar Boats

freshwater lakes and impoundments accessible through locks, and other flowing waters that are navigable interstate by vessels subject to this regulation (40 CFR 140.3).

© 2026 Axopar Boats

9 Appendix I: Checklists

9.1 Checklist: Fire in the motor

- Stop the motor.
- Steer the boat up against the wind, if possible.
- Make sure all passengers have life jackets.
- If necessary:
  - Evacuate the passengers.
  - Call for sea rescue.
- Shut off main power switch.
- Extinguish the fire.
- Wait until fully certain that the fire has been extinguished before opening the motor cover.

  Carefully open the motor cover and be prepared to use the handheld fire extinguisher if necessary for post-fire extinguishing.
- Put out possible smoldering fires with water.

9.2 Checklist: After fire

- Open doors and windows for better ventilation.
- Inspect the boat and its equipment, and repair any damages.
- Contact local authorities, if needed.
- Make sure that the fire extinguishing equipment is refilled or replaced after use.

9.3 Checklist: After grounding

If the boat hits a rock, the damage may be easily visible or hidden.

- Make sure that everyone on board is wearing a life jacket.
- Check that everyone on board is up on the deck.
- If necessary, make an emergency call or use a distress signaling device.
- Immediately after a capsize, check the bilge for leaks. Even if the bilge pump is not rated for leaks, you may try to empty the boat using it.
- Stop the motors and lift them out of the water.
- Turn off all the main electrical switches.
- If you can detach the boat after a rock slide, check the condition of the motor.
- Inspect the boat for leaks.
- To avoid further damage to the motor, do not drive the boat if, for example, the motor blade is damaged.

© 2026 Axopar Boats

- If the leak is small, the boat is detached and at least one of the motors is functioning, drive to the nearest shore to prevent the boat from sinking.
- If a life raft is available and required, prepare it for use.
- If you detect a leak, close all doors and hatches. Open doors and hatches may cause the boat to drown more quickly.
- Do not go inside of the boat if it has a leak.
- Call for towing assistance from local authorities or other agencies.
- A professional should inspect the boat after grounding. Even if there is no visible leak, the hull may be damaged and in need of repair.

⚠ WARNING A big leak may cause the boat to sink quickly. Do not go or stay in and wear a life jacket.

9.4 Checklist: Regular inspection before leaving harbor

Safety

Make sure that:

- All the people onboard have life jackets.
- The wind and wave conditions do not exceed the design category of the boat.
- The emergency stop lanyard is attached to driver.
- There is a fire extinguisher (or several) onboard and their approval/inspection date has not expired.
- The needed ropes and anchor are onboard.

Draining and tightness

Check that:

- There is no water in the bilge.
- All the bilge pumps are functional.
- The bilge has no signs of cooling liquid leaks.
- All deck hatches are tightly closed.

Electrical and motor

Check that:

- All the fuses are intact.
- The main switches are switched on.
- The batteries have enough power.
- The motor works properly.
- The motor cooling water flows as expected

© 2026 Axopar Boats

9.5 Checklist: After using the boat

Make sure that:

- The main switches are switched off.
- The septic tank discharge valve is closed.
- There is no water in the bilge.
- The bilge pumps are functional.
- The deck draining works properly and all the draining valves are open.
- All deck hatches, roof canvas and doors are tightly closed.

9.6 Checklist: Boat handling before leaving harbor

For safe navigation under all weather conditions, proper sound signaling equipment in compliance with regulations (COLREG, 1972) must be carried on board. Make sure that the sound signaling equipment on the boat is compliant with these regulations.

⚠ CAUTION According to national regulations in some countries, it is a legal requirement to wear a life vest at all times.

- Check that the boat and its equipment are in seaworthy condition.
- Always listen to long-term weather forecasts when planning longer trips.
- Always make sure there is enough freshwater in the tanks.
- Always make sure that the charging level of the battery is adequate for the whole trip. When the charging level of the battery decreses, so does the available power. You should reserve at least 20% extra for a trip.
- Check that all items on board are properly stowed and adequately secured to manage rough sea and wind conditions.
- Make sure that the swim ladder is raised out of the water before moving off.
- Make sure that the steering is correctly positioned before starting.
- All persons on board must wear an appropriate life vest when on deck.

9.7 Checklist: Before anchoring

1. Check the chart to see if anchoring is permitted in the area.
2. Listen to the weather forecast for the area and take note of the expected wind conditions.
3. Switch on the echo sounder.
4. Study the seabed conditions and make sure that there is good holding ground.
5. Check that the safety chain has been released from the anchor.
6. Wait until you have reached the intended anchoring point before lowering the anchor.
7. Let out the anchor line equal to at least three times the depth of the water.

© 2026 Axopar Boats

8. Put the motor in astern to check that the anchor has taken hold (only when bow anchoring).
9. Note your position on the GPS. Regularly check that the boat has not moved from its position.
10. Set the echo sounder to “Anchor Watch”.

⚠ WARNING Always fix the anchor in such a way that it is securely fastened onto the boat. An anchor that falls off when under way may cause serious damage to the boat and mortal danger to the crew.

9.8 Checklist: Before winter lay-up

- Wash the hull and bottom immediately after lifting the vessel out of the water.
- Wash all parts inside, also under the floorboards.
- Leave all lockers, drawers, and cabin and wardrobe doors open.
- Remove the carpets.
  - Store the carpets and cushions indoors in a dry place.
  - If this is not possible, make sure that the cushions are dry and position them on their side.
- Disconnect and service the fridge.
  - Switch off the power and disconnect the power supply.
  - Defrost the fridge.
  - Clean and dry the exterior and the interior of the fridge.
  - Empty and dry the condensate water tray.
  - Leave the door slightly ajar to enable ventilation.
  - Check the more detailed instruction in the manufacturer's manual.
- Ensure good ventilation in the boat.

NOTICE If the 12V batteries are left aboard, make sure they are fully charged, otherwise the batteries can freeze and crack.

9.8.1 High voltage battery

- Because there is a high voltage battery in the boat, you should store it in a protected and temperate environment (0-25°C).
- To prevent battery depletion and damage, keep the main battery at a 30% charge level with the service disconnect device removed.
- For short-term storage, charge the 12V battery and disengage the main switch.
- For long-term storage, disconnect the 12V battery.
- Do not store the boat in temperatures below -40°C or above 55°C, and keep it away from heat sources.
- If the boat is exposed to sub-zero temperatures, the seawater circuit must be flushed.
- For detailed information about high voltage battery and storing, see the motor manual.

© 2026 Axopar Boats

9.9 Checklist: Before launching

1. Remove the tarpaulin in good time before launching.
2. Wash the hull with a regular shampoo and a soft brush.
3. Wax the hull, if necessary.

   Use a standard boat wax.
4. If there are small scratches on the hull or if some of the surface gelcoat has lost its shine, use a rubbing compound on these areas before polishing.
5. Paint the bottom with antifouling paint.
6. If the batteries have been removed, put them back and check the electrolyte level in the cells.

   Check the condition of the batteries.
7. Check all cables, clamps, motor mountings and other fastenings.
8. Check the steering before launching.
9. Check the instrumentation.
10. Close all water drain plugs.
11. Check that the seacocks are tight and in order, check for any frost damage.
12. Check all pipes, hoses and cocks.
13. Make a note of any frost damage.

9.10 Maintenance log

Regular maintenance tasks are presented in the following table. If you feel confident enough, you can perform all these tasks yourself. If not, please contact your local Axopar dealer for help.

Depending on vessel model and components, every task might not be relevant.

© 2026 Axopar Boats

MAINTENANCE LOG	Frequency				
Task to be performed	Every trip	Every month	Every 3 months	Every 6 months	Annually
Bilge system - Remove, clean and inspect bilge pump, check valve and its surroundings for damage or debris that may reduce the performance of the pump	●				
Waste system - Replace the no-smell carbon filters					●
Waste system - Run the macerator pump					●
Heating system - Run the heater for 10 minutes		●			
Air conditioning system - Clean air filter, seawater strainer and check the system for leaks		●			
Water system - Clean inline filter			●		
Inspect Zinc anodes - Replace all zinc anodes if 50 % has been eaten up				●	
Fire extinguisher inspection					●
CO alarm - Push test button for 1 sec			●		
Smoke alarm - Push test button for 3 sec			●		
Seacocks - Turn handle Open and Close					●
Batteries - Charge state, terminals securely attached and free from corrosion					●
LPG system - Check condition of LPG lines, connectors and LPG shut off valve					●
Fuel system - Check condition of fuel lines, connectors and fuel shutoff valves					●
Inspect fuel tank compartment bilge for water				●	
Livewell pump - Check condition of hoses and connectors			●		
Gelcoat waxing				●	
Clean hull & deck from saltwater	●				
Keep bilge dry and clean	●				
Boat covers - Clean upholstery covers and sunroof cover				●	

© 2026 Axopar Boats

10 Appendix II: Electrical diagrams

© 2026 Axopar Boats

Axopar 22-E Breeze

ELECTRICAL DIAGRAM

DOCUMENT INCLUDES:
ELECTRICAL STRUCTURE OF 12V DC SYSTEM (EURO/USA)
12V DC DIAGRAM

NOTE! ALL CABLE AREAS ARE IN METRIC SYSTEM (mm2).

REVISION A1

Navix disclaims all liability for any issues that may arise from the use of devices not specified in this documentation.
The electrical system design is based exclusively on the devices listed herein, or on the estimated maximum power (or currents)for each circuit when the specific device model was unknown at the time of engineering.
Any substitution of devices or the use of devices with higher power (or ampacity) than specified herein voids all warranties and releases Navix from any responsibility for system performance or safety.

Date of modification	Modified by	Description
10.9.2024	PF	A1: 2005200; Introduced drawing

Date	10.9.2024
Drawing by	PF
Sheet rev.	1
Project rev.	A

NAVIX
Copyright by

Boat	Sub-product code	Product code	Project ID
Axopar			

Boat model	Title	Loc	Sheet
22-E (Breeze)	COVER	HL	1/ 26

12VDC

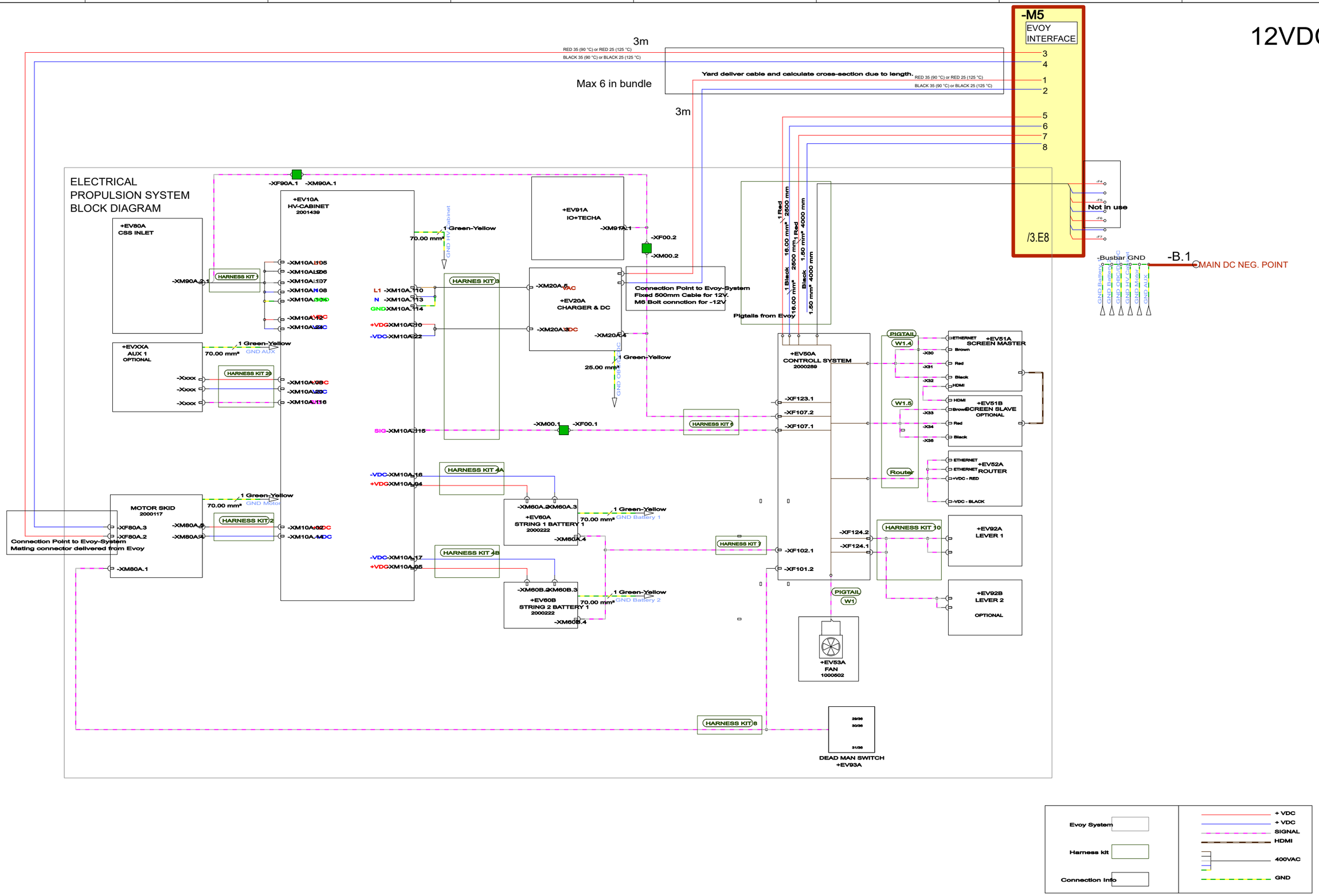

10.9.2024	PF	A1: 2005200; Introduced drawing	Date	10.9.2024	NAVIX	Axopar			
			Drawing by	PF		Boat	Sub-product code	Product code	Project ID
			Sheet rev.	1		22-E (Breeze)	EVOY INTERFACE	HL	2 / 26
Date of modification	Modified by	Description	Project rev.	A	Copyright by	Boat model	Title	Loc	Sheet

12VDC

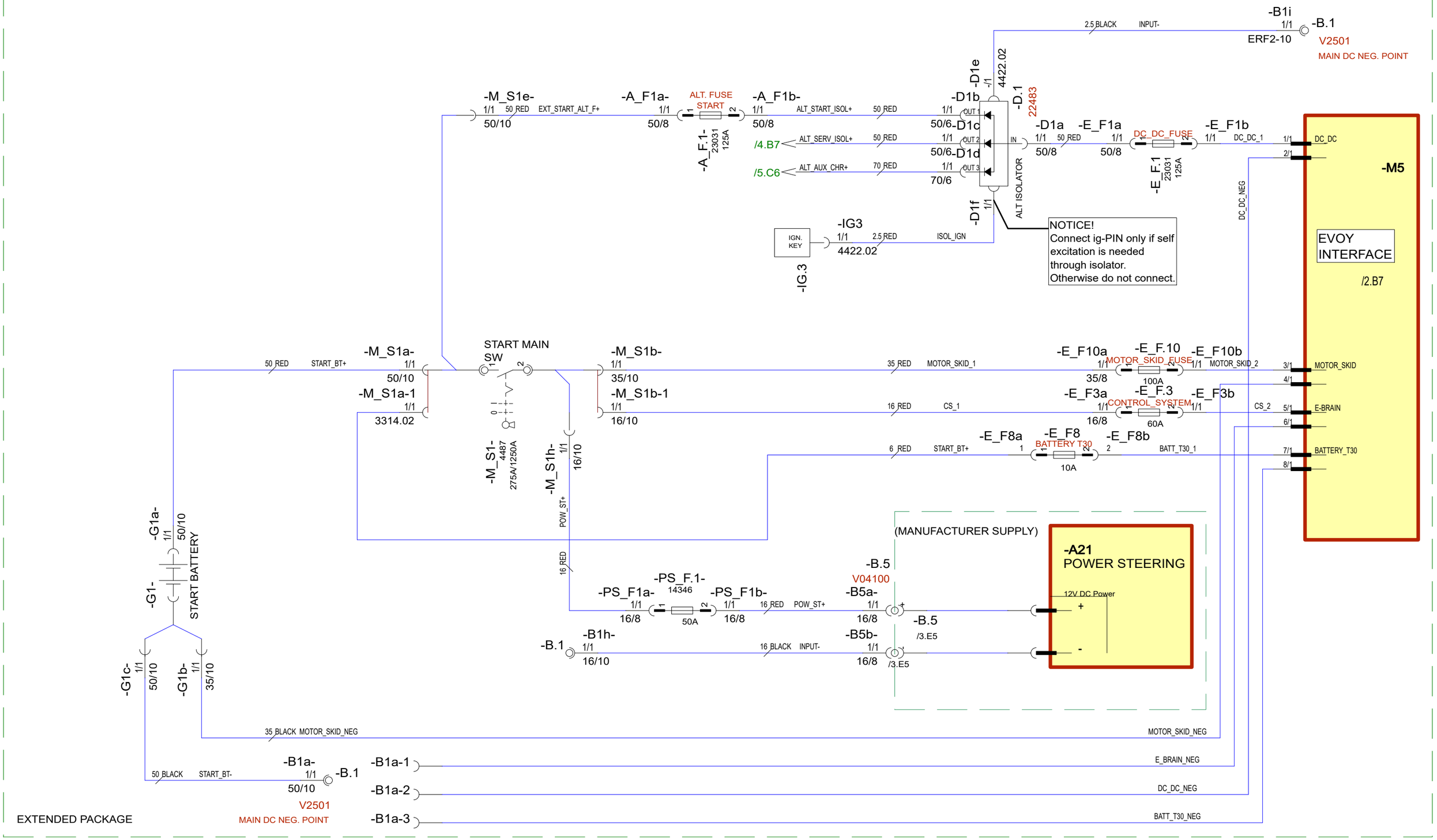

10.9.2024	PF	A1: 2005200; Introduced drawing	Date	10.9.2024	NAVIX	Axopar		
			Drawing by	PF		Boat	Sub-product code	Product code	Project ID
			Sheet rev.	1		22-E (Breeze)	DIAGRAM - DUAL BATTERY BREEZE	HL	3 / 26
Date of modification	Modified by	Description	Project rev.	A	Copyright by	Boat model	Title	Loc	Sheet

12VDC

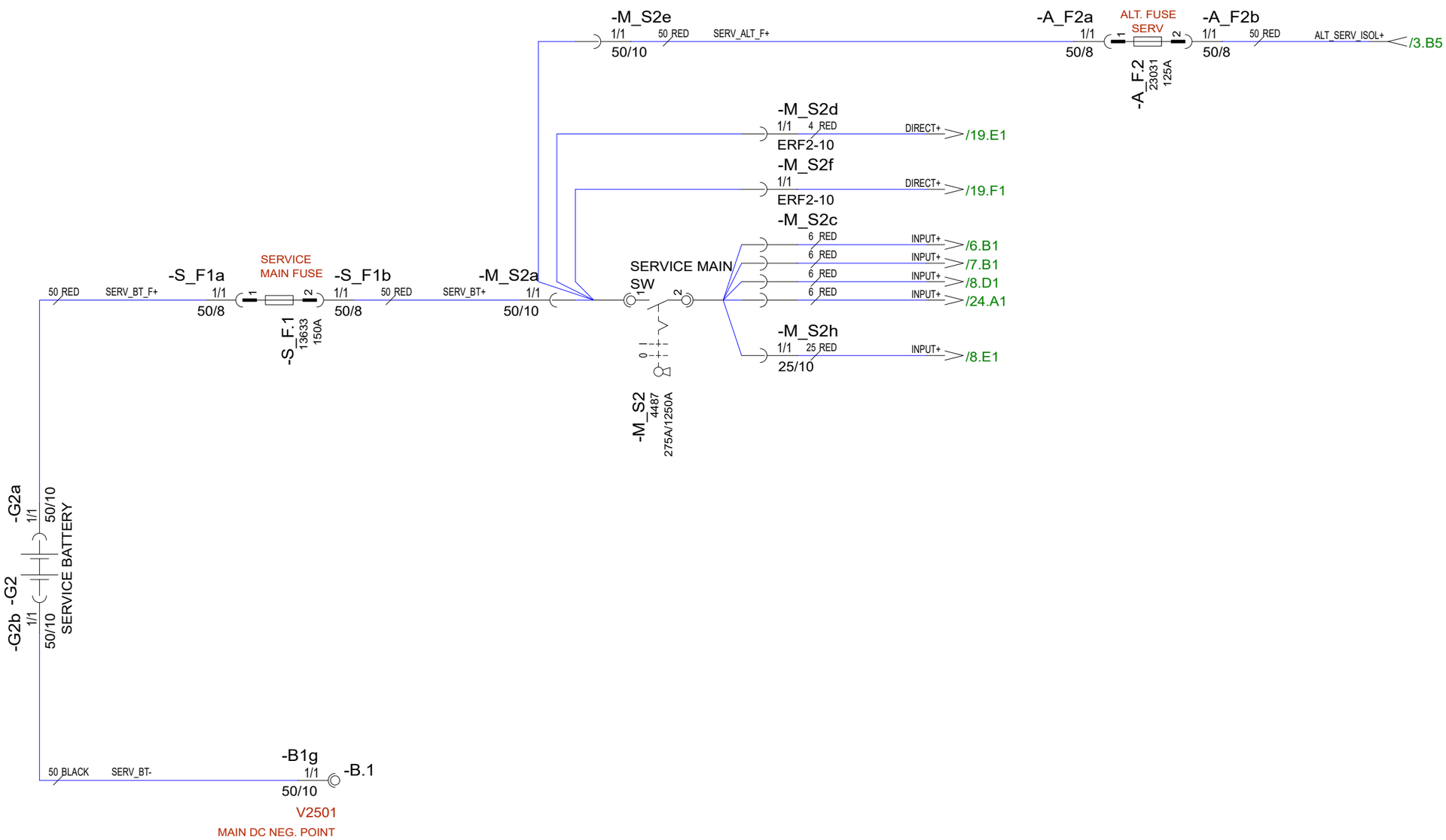

EXTENDED PACKAGE

10.9.2024	PF	A1: 2005200; Introduced drawing	Date	10.9.2024	NAVIX	Axopar		
			Drawing by	TuM		Boat	Sub-product code	Product code	Project ID
			Sheet rev.	1		22-E (Breeze)	DIAGRAM - DUAL BATTERY, SERVICE	HL	4 / 26
Date of modification	Modified by	Description	Project rev.	A	Copyright by	Boat model	Title	Loc	Sheet

12VDC

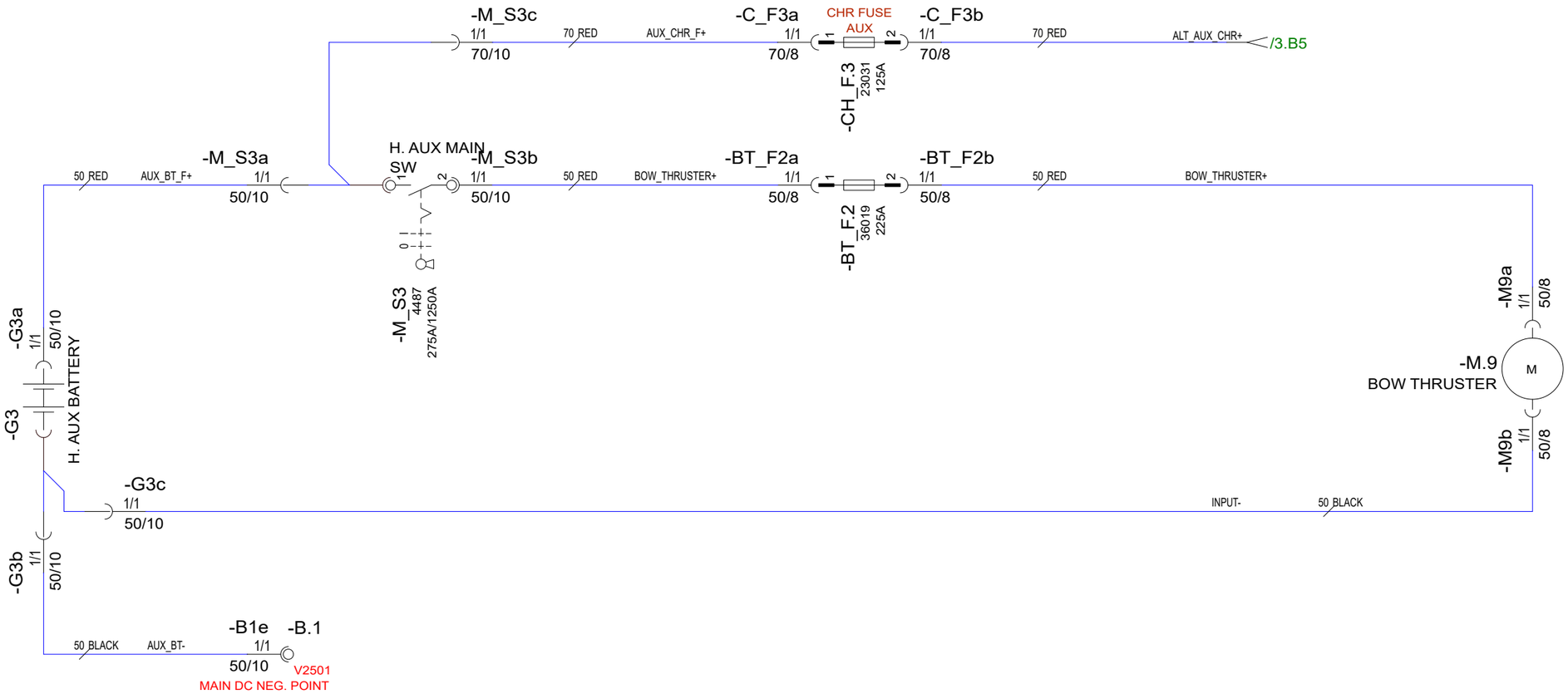

10.9.2024	PF	A1: 2005200; Introduced drawing	Date 10.9.2024	NAVIX	Axopar			
			Drawing by TT		Boat	Sub-product code	Product code	Project ID
			Sheet rev. 1		22-E (Breeze)	DIAGRAM - BOW THRUSTER	HL	5 / 26
Date of modification	Modified by	Description	Project rev. A	Copyright by	Boat model	Title	Loc	Sheet

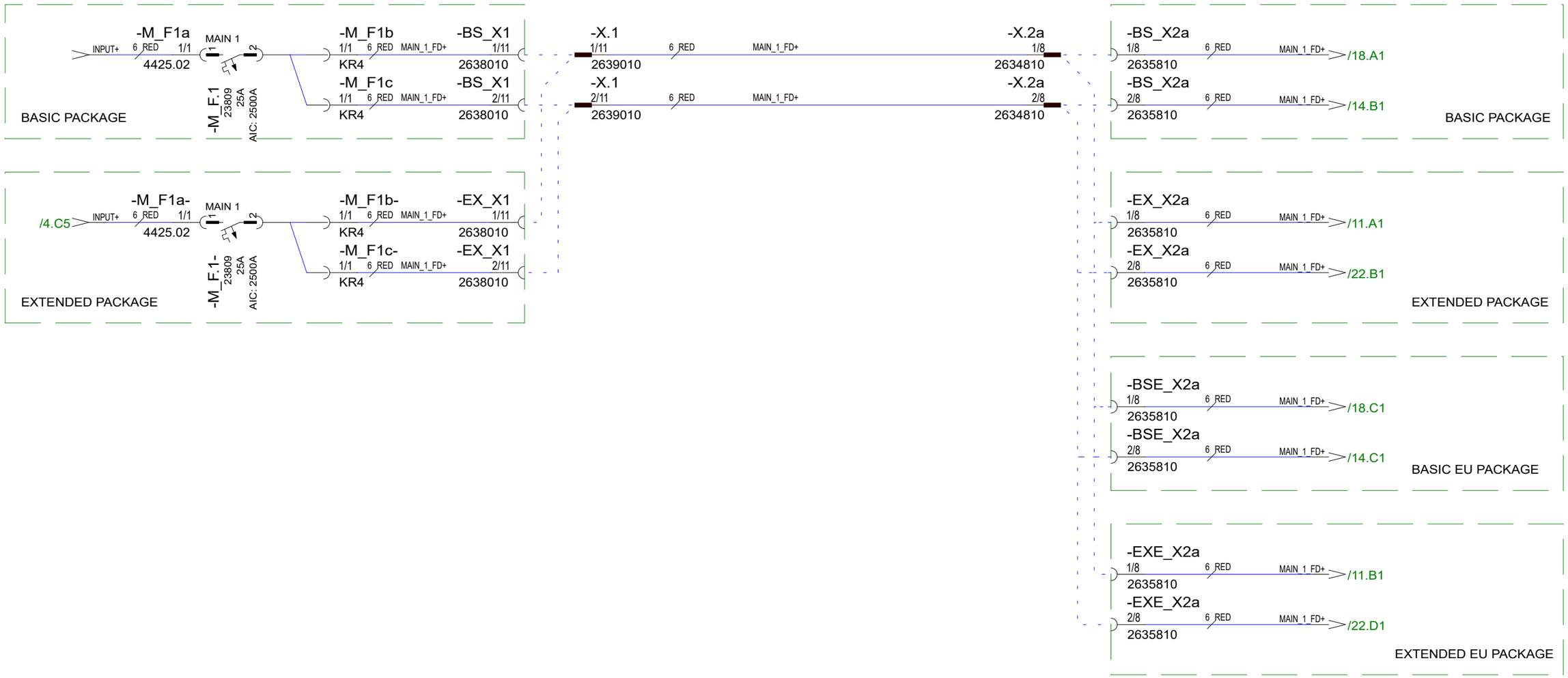

12VDC

10.9.2024	PF	A1: 2005200; Introduced drawing	Date 10.9.2024	NAVIX	Axopar			
			Drawing by TuM		Boat	Sub-product code	Product code	Project ID
			Sheet rev. 1		22-E (Breeze)	DIAGRAM - MAIN FUSES	HL	6 / 26
Date of modification	Modified by	Description	Project rev. A	Copyright by	Boat model	Title	Loc	Sheet

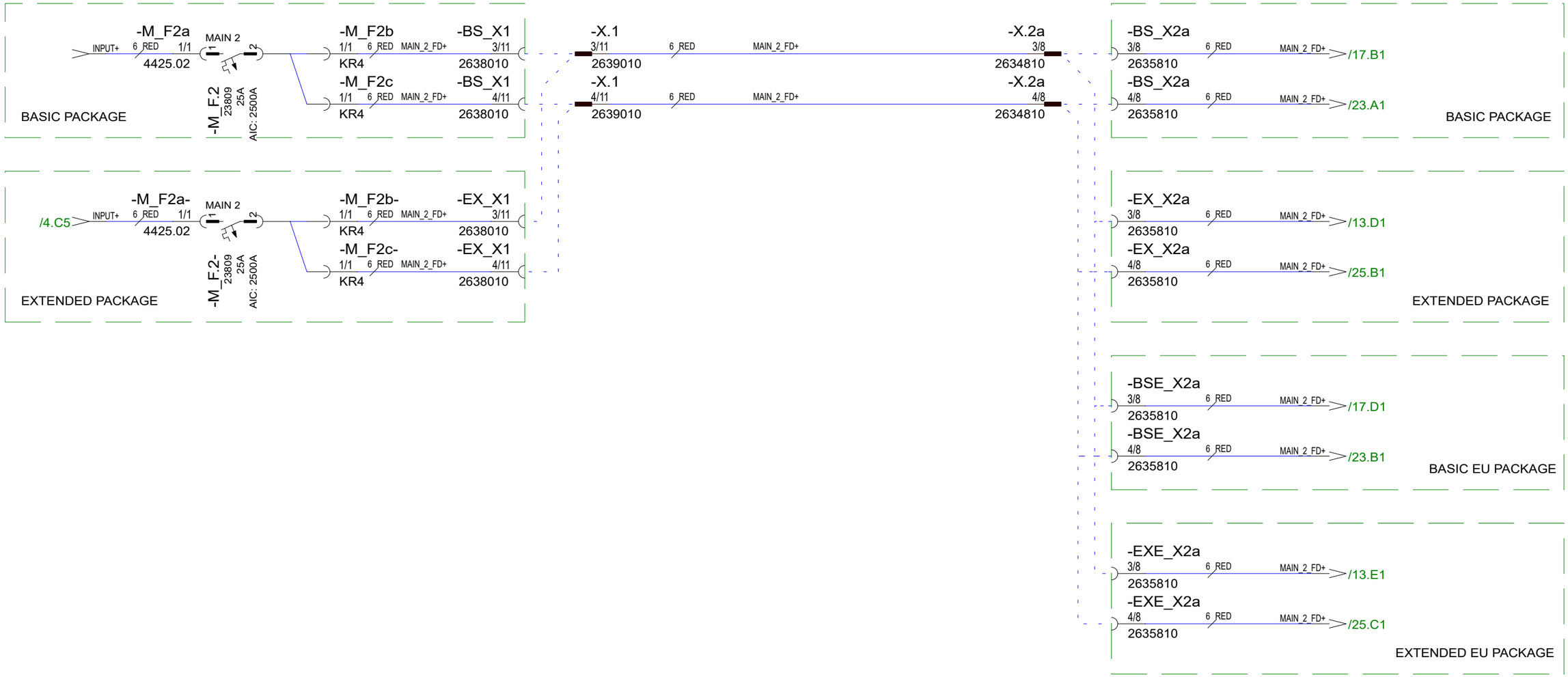

12VDC

10.9.2024	PF	A1: 2005200; Introduced drawing	Date 10.9.2024	NAVIX	Axopar			
			Drawing by TuM		Boat	Sub-product code	Product code	Project ID
			Sheet rev. 1		22-E (Breeze)	DIAGRAM - MAIN FUSES	HL	7 / 26
Date of modification	Modified by	Description	Project rev. A	Copyright by	Boat model	Title	Loc	Sheet

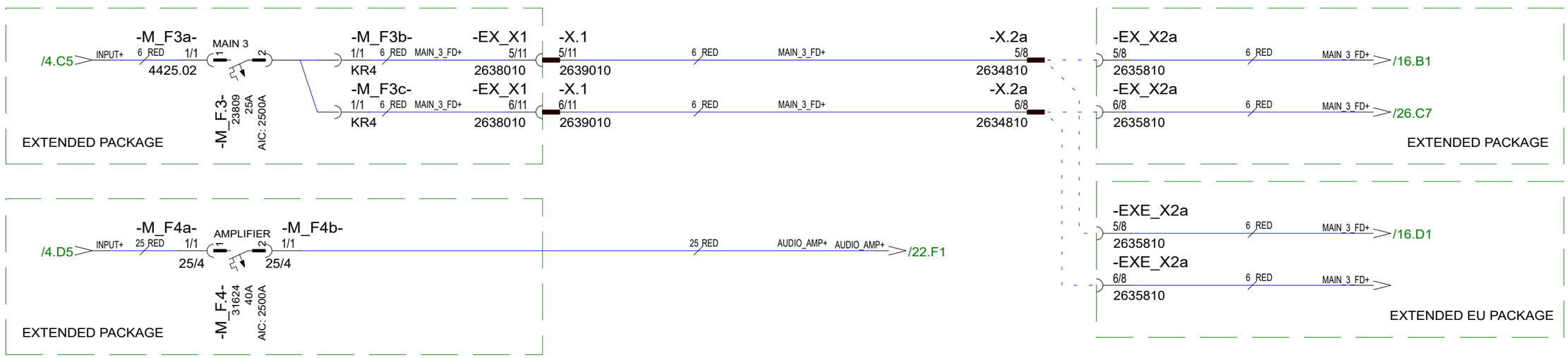

12VDC

10.9.2024	PF	A1: 2005200; Introduced drawing	Date 10.9.2024	NAVIX	Axopar			
			Drawing by TuM		Boat	Sub-product code	Product code	Project ID
			Sheet rev. 1		22-E (Breeze)	DIAGRAM - MAIN FUSES	HL	8 / 26
Date of modification	Modified by	Description	Project rev. A	Copyright by	Boat model	Title	Loc	Sheet

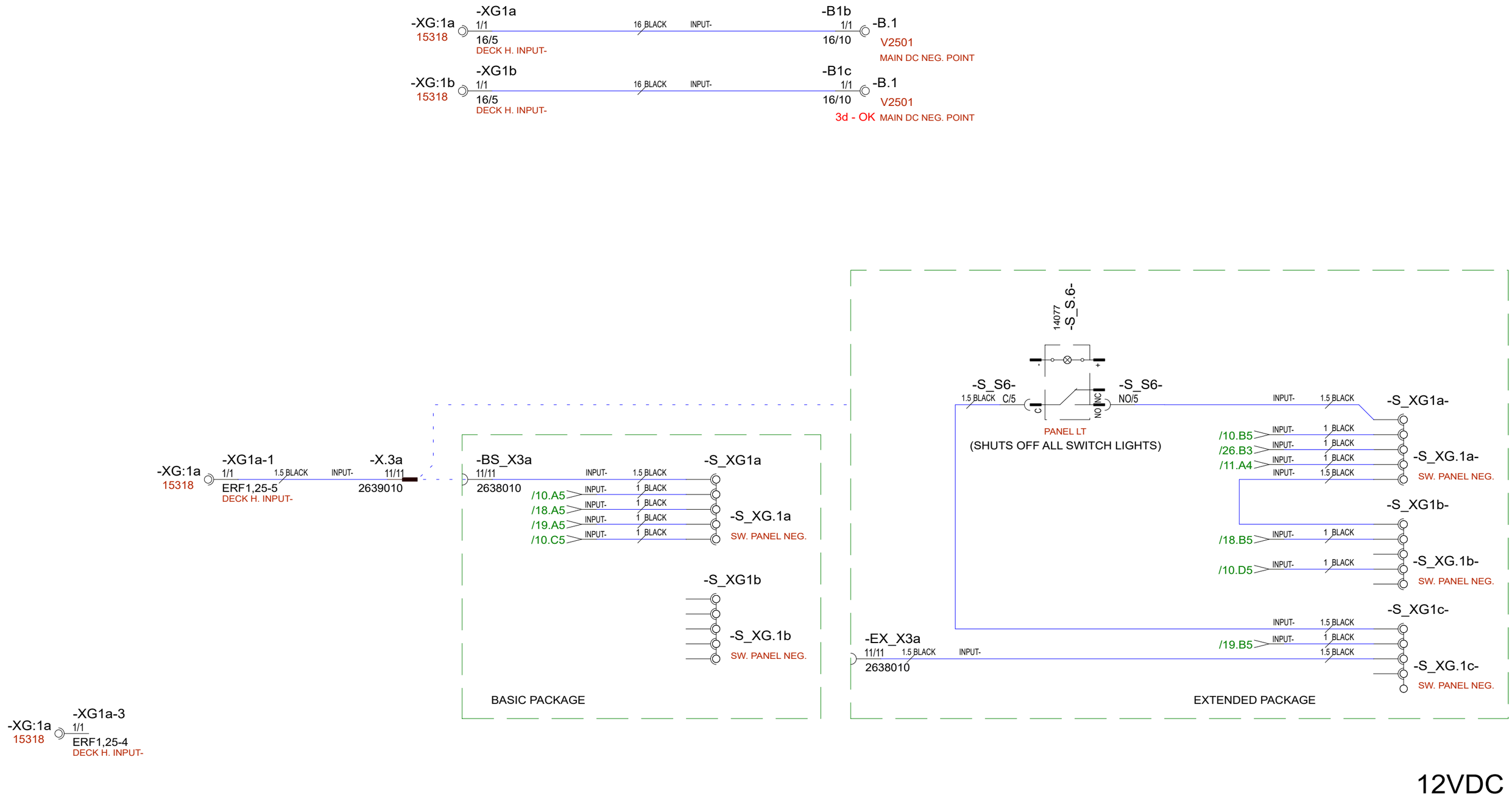

10.9.2024	PF	A1: 2005200; Introduced drawing	Date	10.9.2024	NAVIX	Axopar			
			Drawing by	TuM		Boat	Sub-product code	Product code	Project ID
			Sheet rev.	1		22-E (Breeze)	DIAGRAM - INPUT-	HL	9 / 26
Date of modification	Modified by	Description	Project rev.	A	Copyright by	Boat model	Title	Loc	Sheet

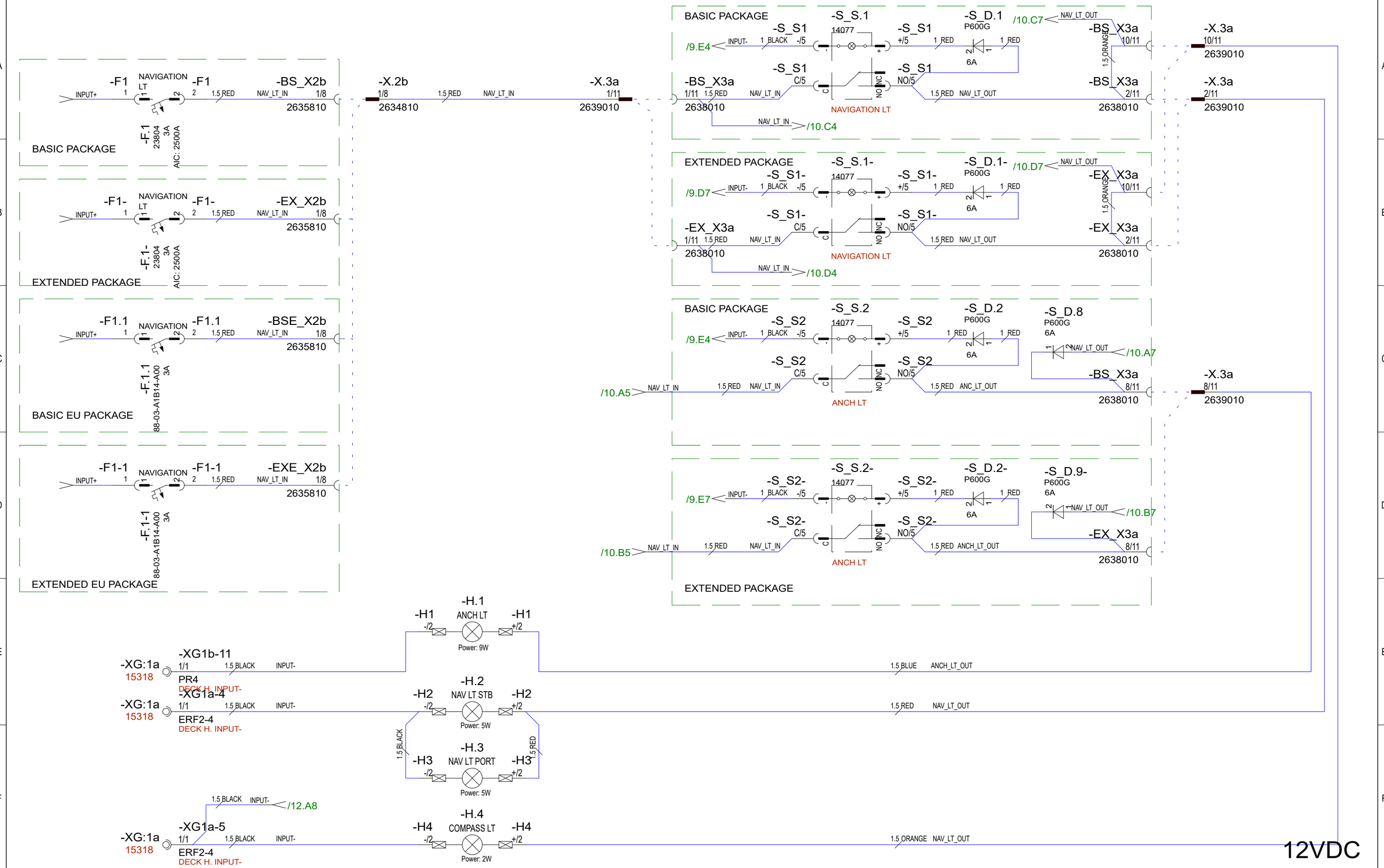

10.9.2024	PF	A1: 2005200; Introduced drawing	Date	10.9.2024	NAVIX	Axopar			
			Drawing by	TuM		Boat	Sub-product code	Product code	Project ID
			Sheet rev.	1		22-E (Breeze)	DIAGRAM - NAVIGATION LT	HL	10 / 26
Date of modification	Modified by	Description	Project rev.	A	Copyright by	Boat model	Title	Loc	Sheet

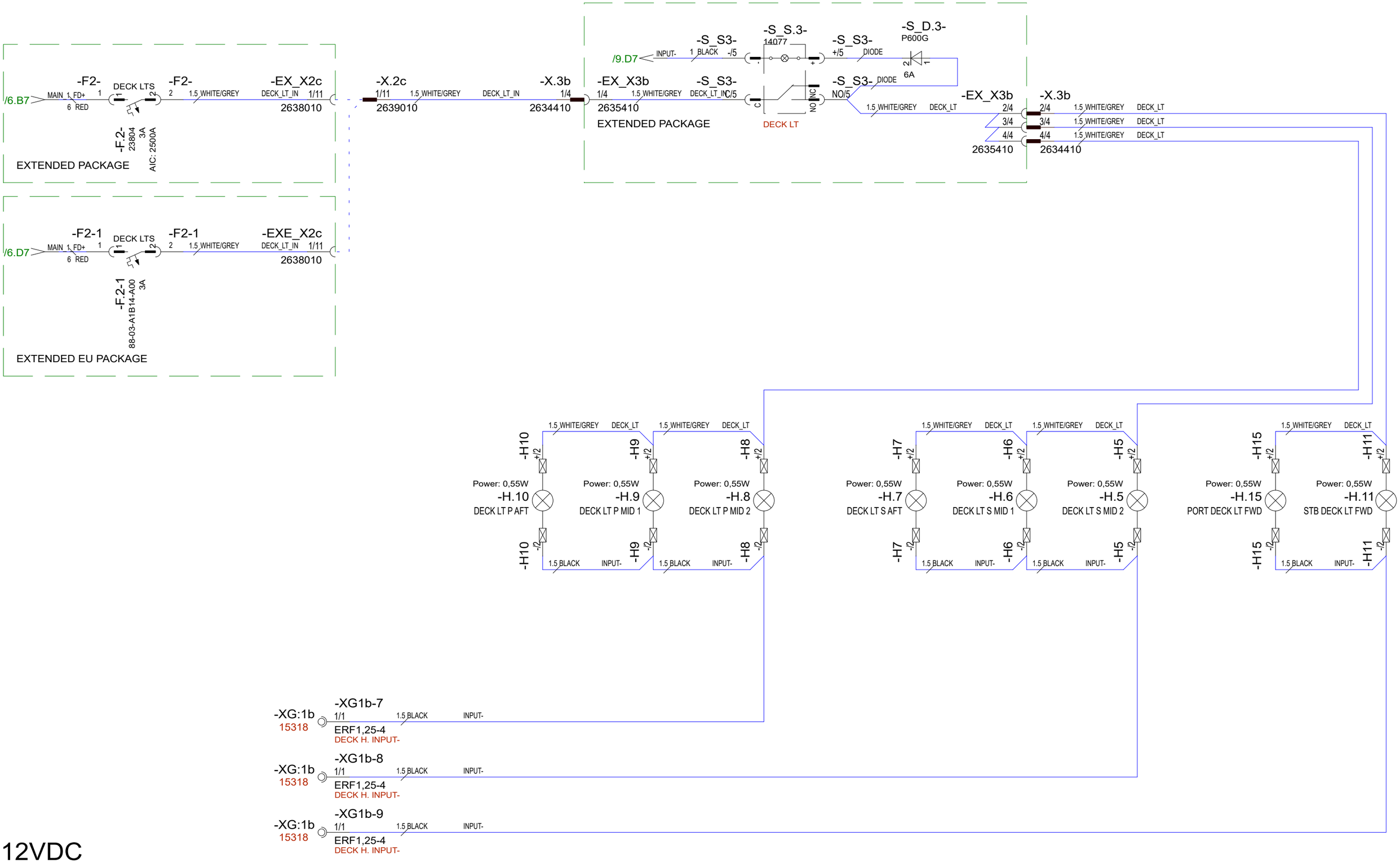

10.9.2024	PF	A1: 2005200; Introduced drawing	Date	10.9.2024	NAVIX	Axopar		
			Drawing by	TuM		Boat	Sub-product code	Product code	Project ID
			Sheet rev.	1		22-E (Breeze)	DIAGRAM - DECK LT	HL	11/ 26
Date of modification	Modified by	Description	Project rev.	A	Copyright by	Boat model	Title	Loc	Sheet

12VDC

10.9.2024	PF	A1: 2005200; Introduced drawing	Date 10.9.2024	NAVIX	Axopar			
			Drawing by TuM		Boat	Sub-product code	Product code	Project ID
			Sheet rev. 1		22-E (Breeze)	DIAGRAM - INTERIOR LT	HL	12 / 26
Date of modification	Modified by	Description	Project rev. A	Copyright by	Boat model	Title	Loc	Sheet

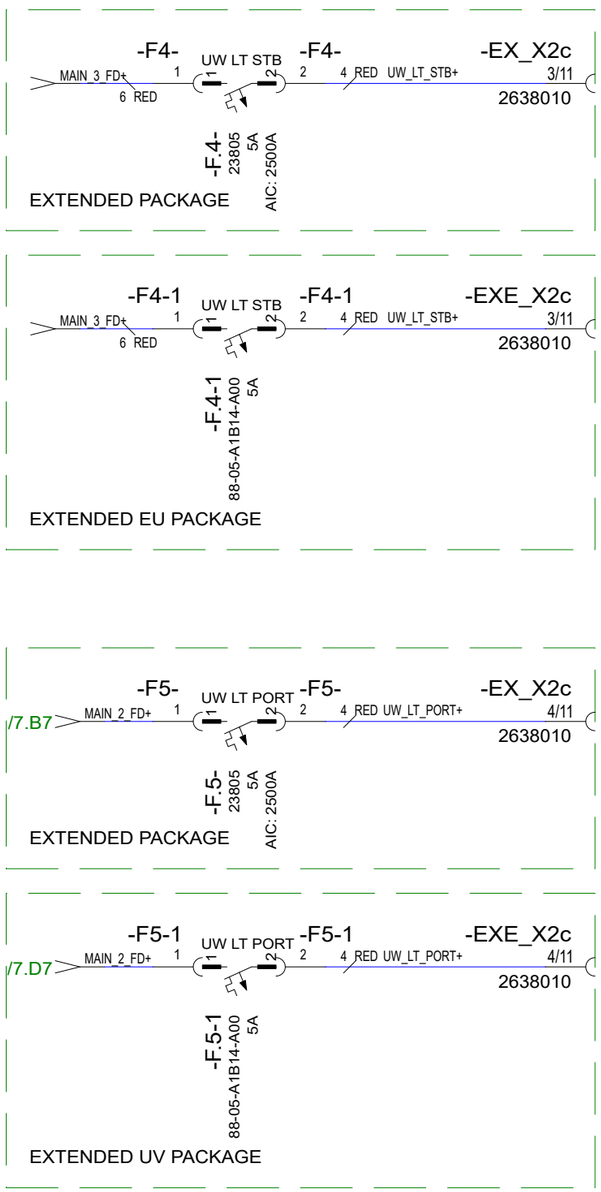

12VDC

10.9.2024	PF	A1: 2005200; Introduced drawing	Date	10.9.2024	NAVIX	Axopar		
			Drawing by	TuM		Boat	Sub-product code	Product code	Project ID
			Sheet rev.	1		22-E (Breeze)	DIAGRAM - UNDER WATER LIGHTS	HL	13 / 26
Date of modification	Modified by	Description	Project rev.	A	Copyright by	Boat model	Title	Loc	Sheet

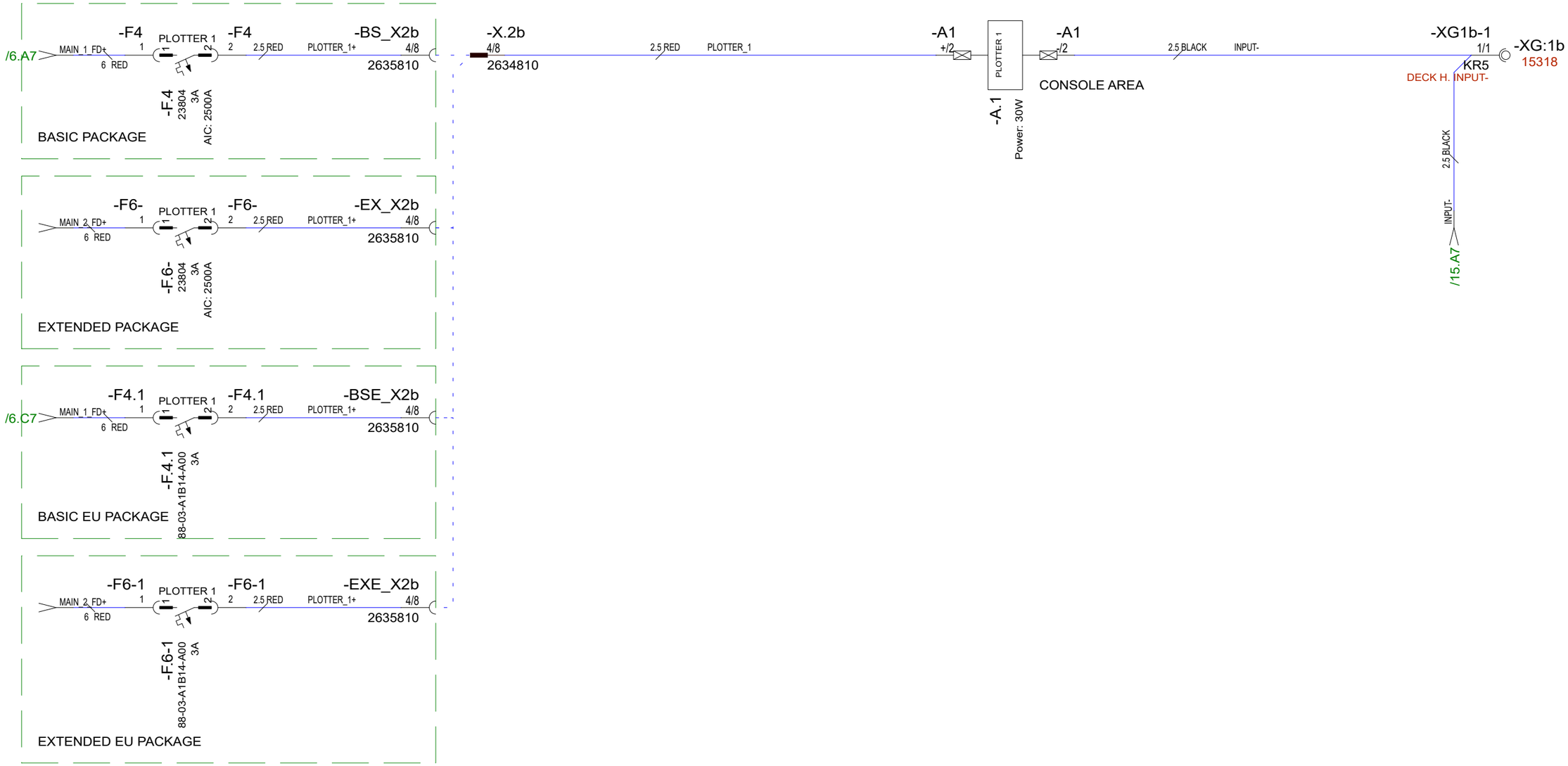

12VDC

10.9.2024	PF	A1: 2005200; Introduced drawing	Date 10.9.2024	NAVIX	Axopar			
			Drawing by TuM		Boat	Sub-product code	Product code	Project ID
			Sheet rev. 1		22-E (Breeze)	DIAGRAM - NAVIGATION EQ.	HL	14 / 26
Date of modification	Modified by	Description	Project rev. A	Copyright by	Boat model	Title	Loc	Sheet

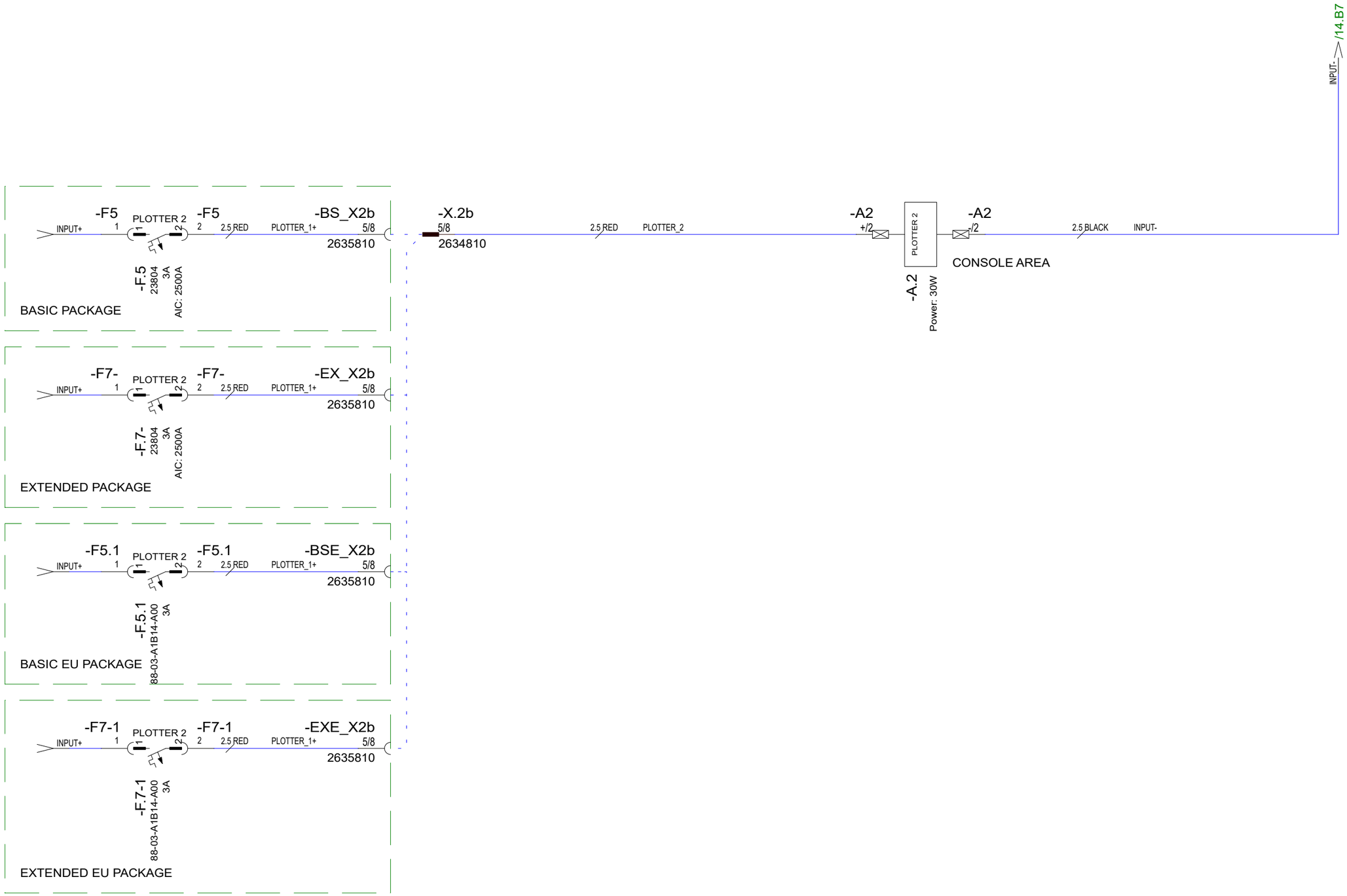

12VDC

10.9.2024	PF	A1: 2005200; Introduced drawing	Date 10.9.2024	NAVIX	Axopar			
			Drawing by TuM		Boat	Sub-product code	Product code	Project ID
			Sheet rev. 1		22-E (Breeze)	DIAGRAM - NAVIGATION EQ.	HL	15 / 26
Date of modification	Modified by	Description	Project rev. A	Copyright by	Boat model	Title	Loc	Sheet

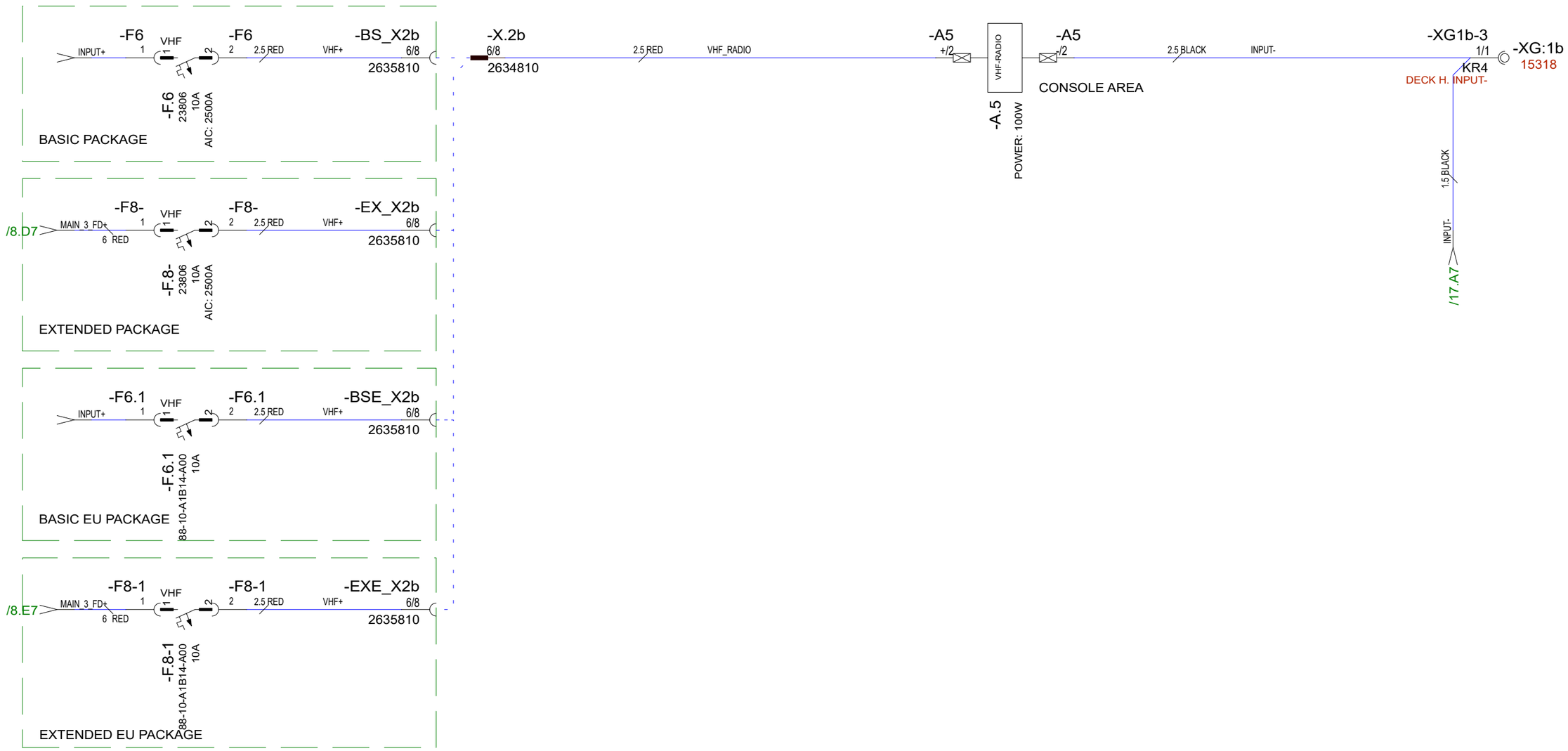

12VDC

10.9.2024	PF	A1: 2005200; Introduced drawing	Date 10.9.2024	NAVIX	Axopar			
			Drawing by TuM		Boat	Sub-product code	Product code	Project ID
			Sheet rev. 1		22-E (Breeze)	DIAGRAM - NAVIGATION EQ.	HL	16 / 26
Date of modification	Modified by	Description	Project rev. A	Copyright by	Boat model	Title	Loc	Sheet

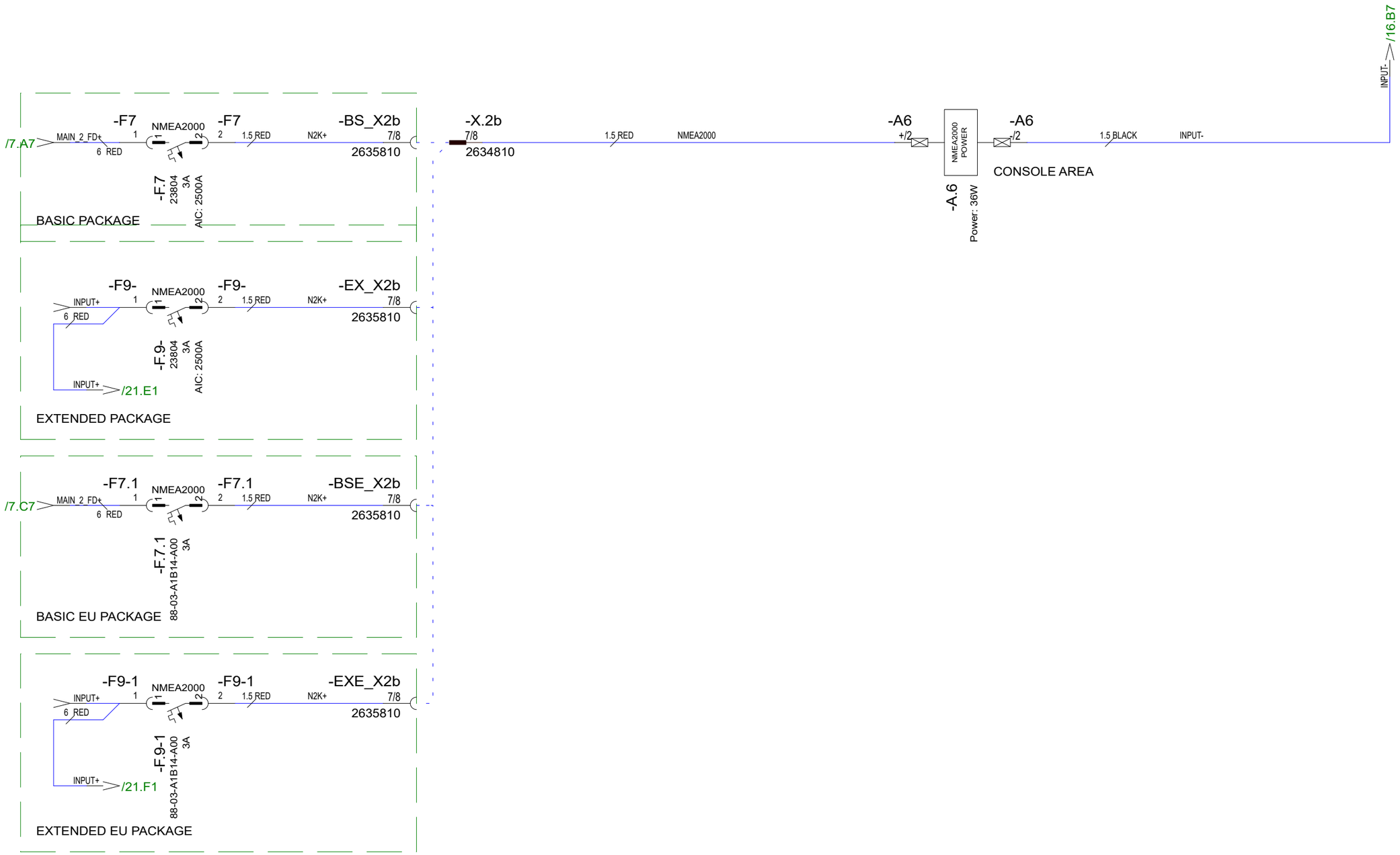

12VDC

10.9.2024	PF	A1: 2005200; Introduced drawing	Date 10.9.2024	NAVIX	Axopar			
			Drawing by TuM		Boat	Sub-product code	Product code	Project ID
			Sheet rev. 1		22-E (Breeze)	DIAGRAM - NAVIGATION EQ.	HL	17 / 26
Date of modification	Modified by	Description	Project rev. A	Copyright by	Boat model	Title	Loc	Sheet

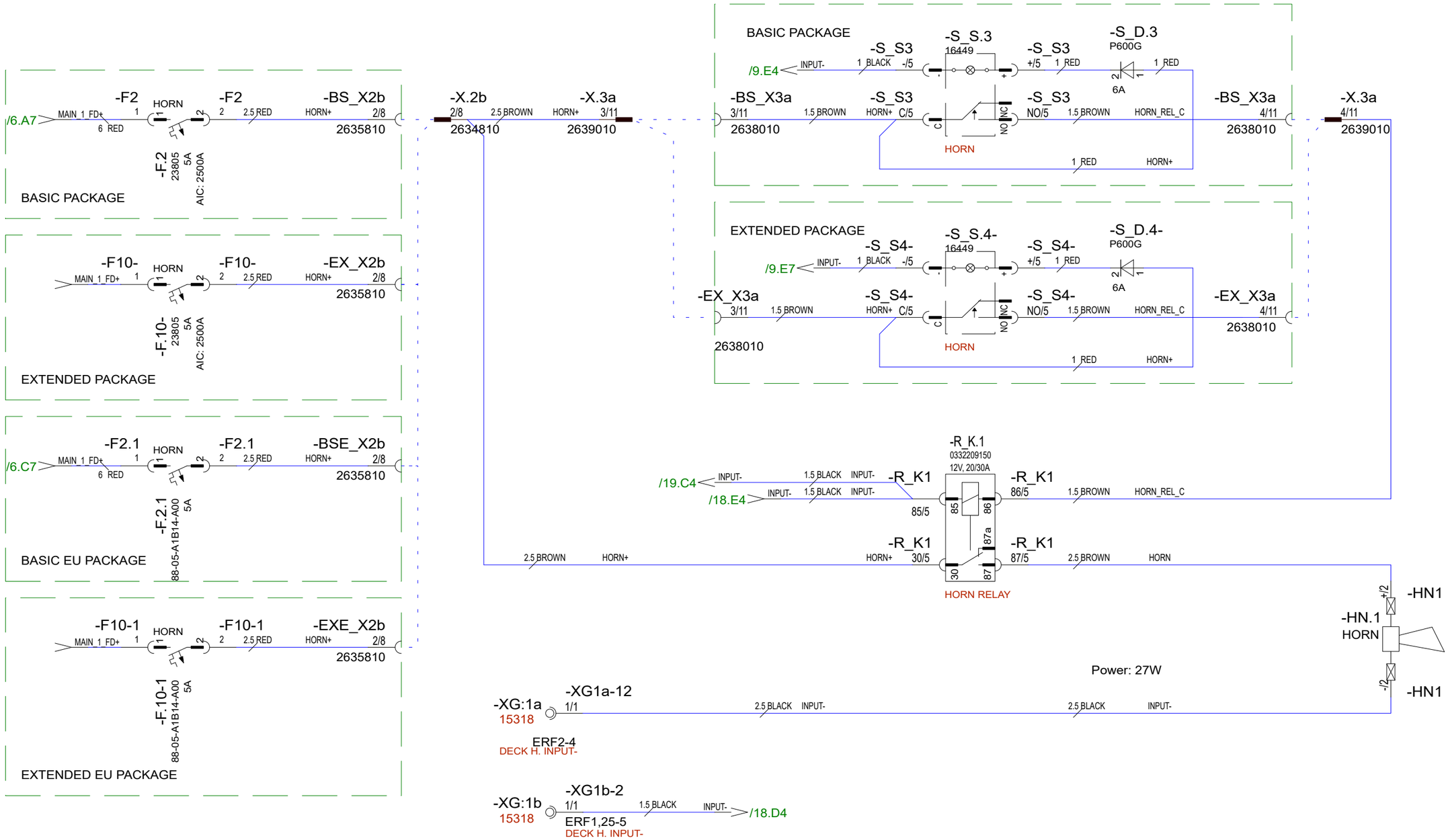

12VDC

10.9.2024	PF	A1: 2005200; Introduced drawing	Date 10.9.2024	NAVIX	Axopar			
			Drawing by TuM		Boat	Sub-product code	Product code	Project ID
			Sheet rev. 1		22-E (Breeze)	DIAGRAM - HORN	HL	18 / 26
Date of modification	Modified by	Description	Project rev. A	Copyright by	Boat model	Title	Loc	Sheet

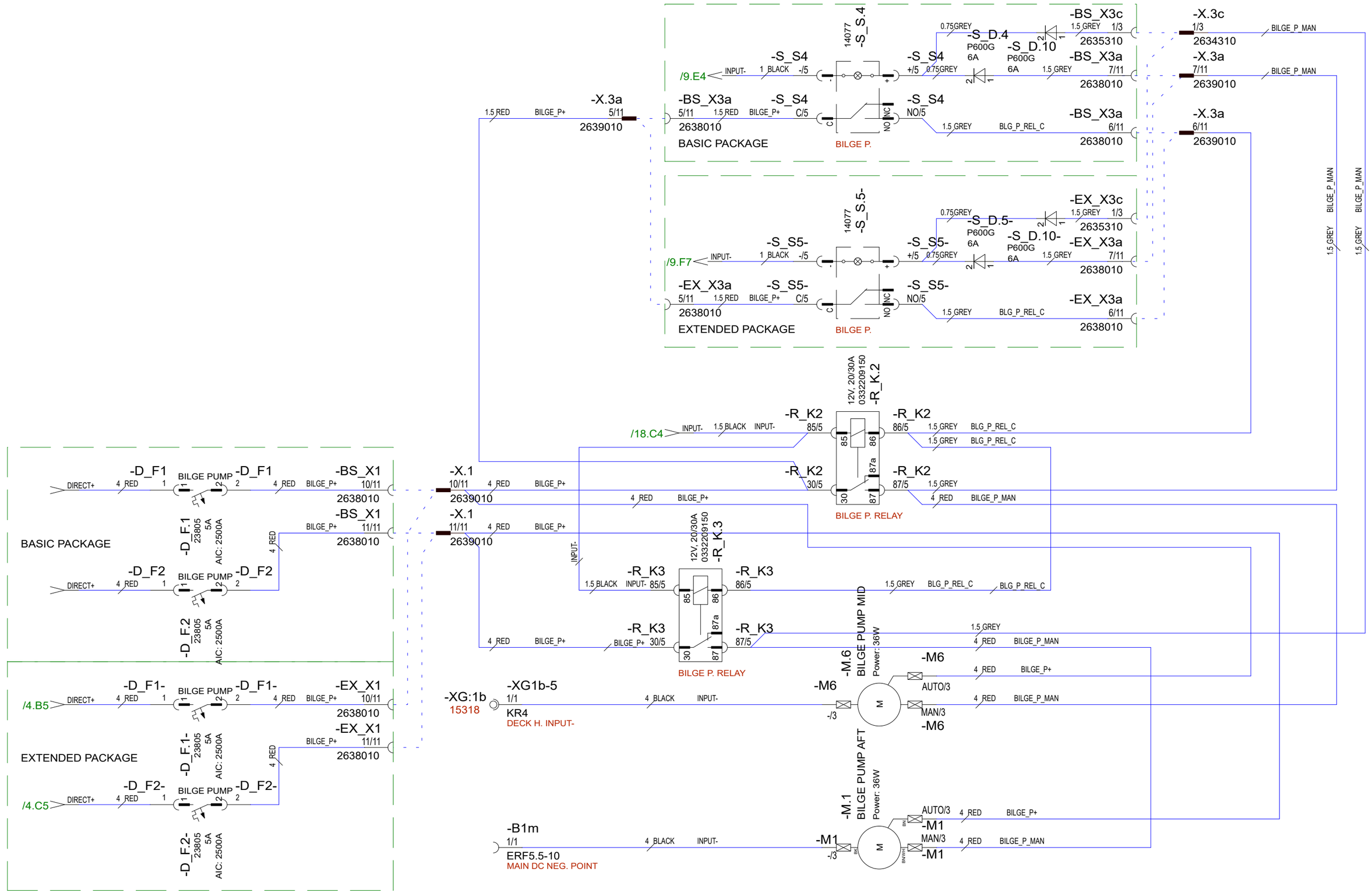

10.9.2024	PF	A1: 2005200; Introduced drawing	Date	10.9.2024	NAVIX	Axopar		
			Drawing by	TuM		Boat	Sub-product code	Product code	Project ID
			Sheet rev.	1		22-E (Breeze)	DIAGRAM - BILGE PUMP	HL	19 / 26
Date of modification	Modified by	Description	Project rev.	A	Copyright by	Boat model	Title	Loc	Sheet

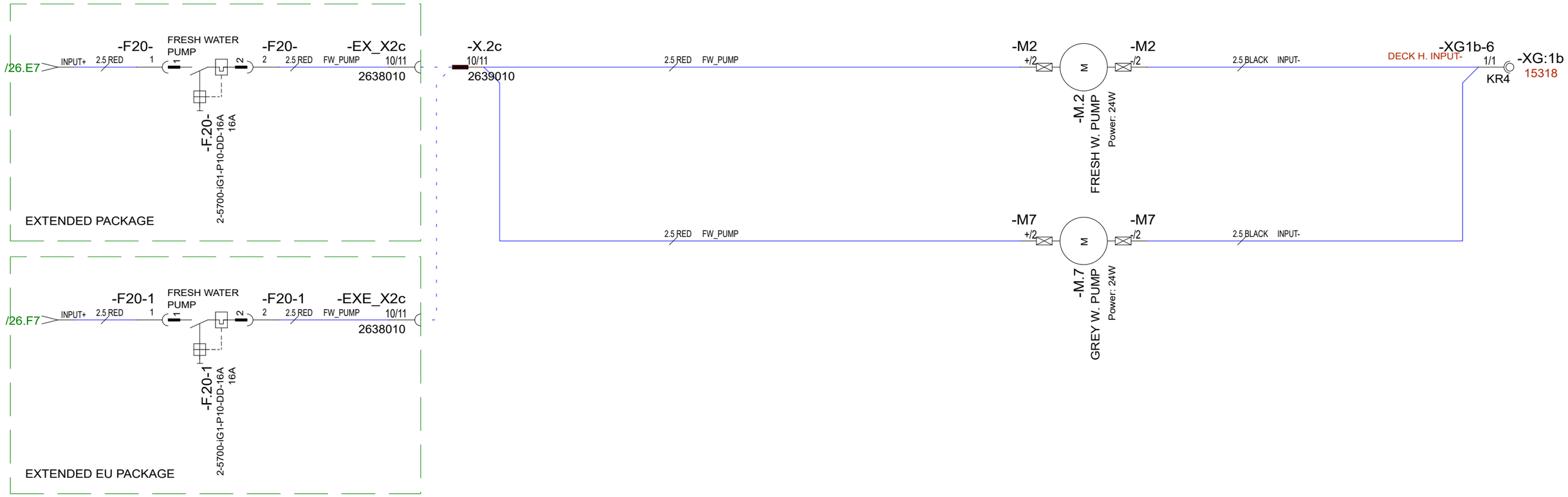

12VDC

10.9.2024	PF	A1: 2005200; Introduced drawing	Date 10.9.2024	NAVIX	Axopar			
			Drawing by TuM		Boat	Sub-product code	Product code	Project ID
			Sheet rev. 1		22-E (Breeze)	DIAGRAM - FRESH W. PUMP	HL	20 / 26
Date of modification	Modified by	Description	Project rev. A	Copyright by	Boat model	Title	Loc	Sheet

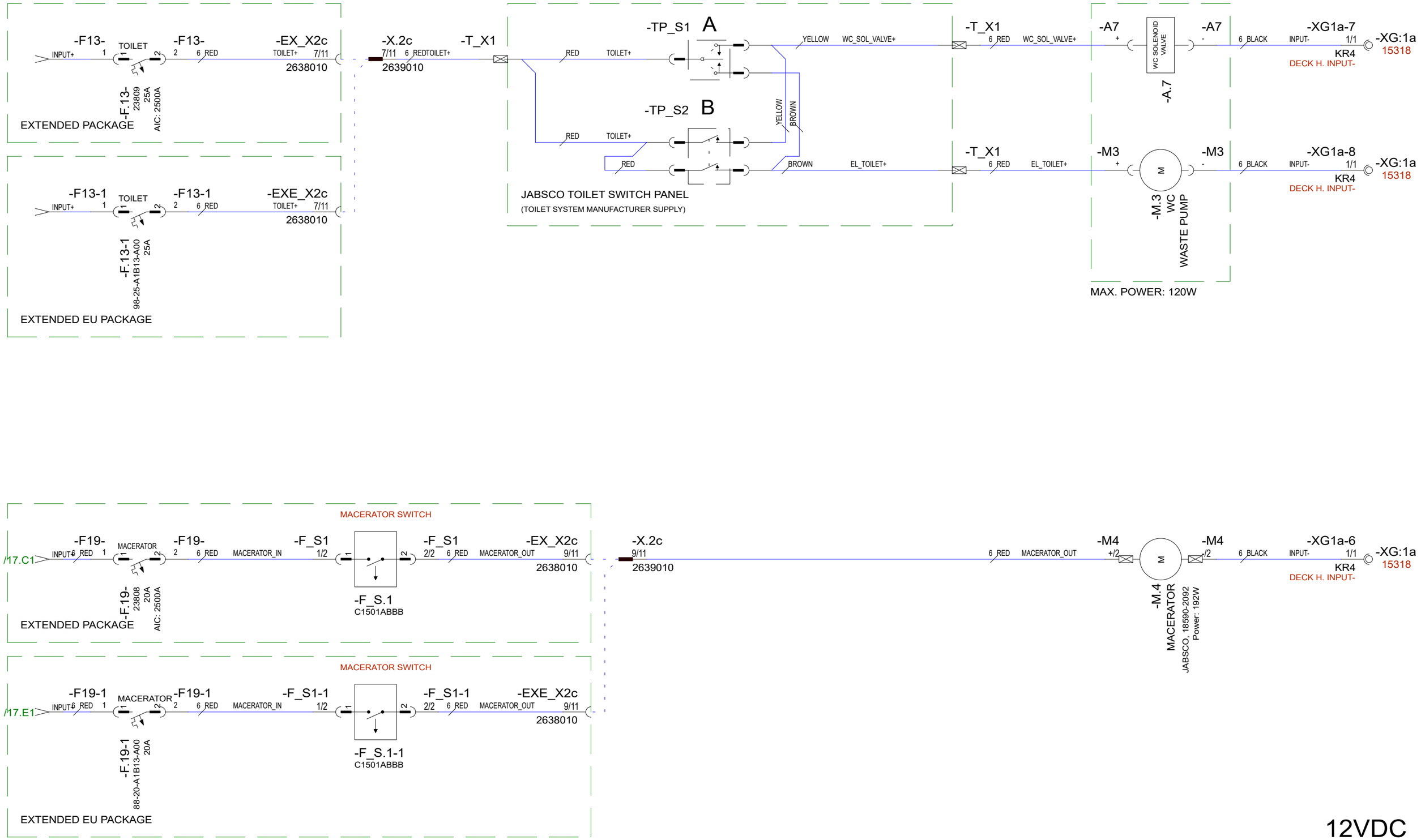

10.9.2024	PF	A1: 2005200; Introduced drawing	Date	10.9.2024	NAVIX	Axopar		
			Drawing by	TuM		Boat	Sub-product code	Product code	Project ID
			Sheet rev.	1		22-E (Breeze)	DIAGRAM - TOILET/MACERATOR	HL	21/ 26
Date of modification	Modified by	Description	Project rev.	A	Copyright by	Boat model	Title	Loc	Sheet

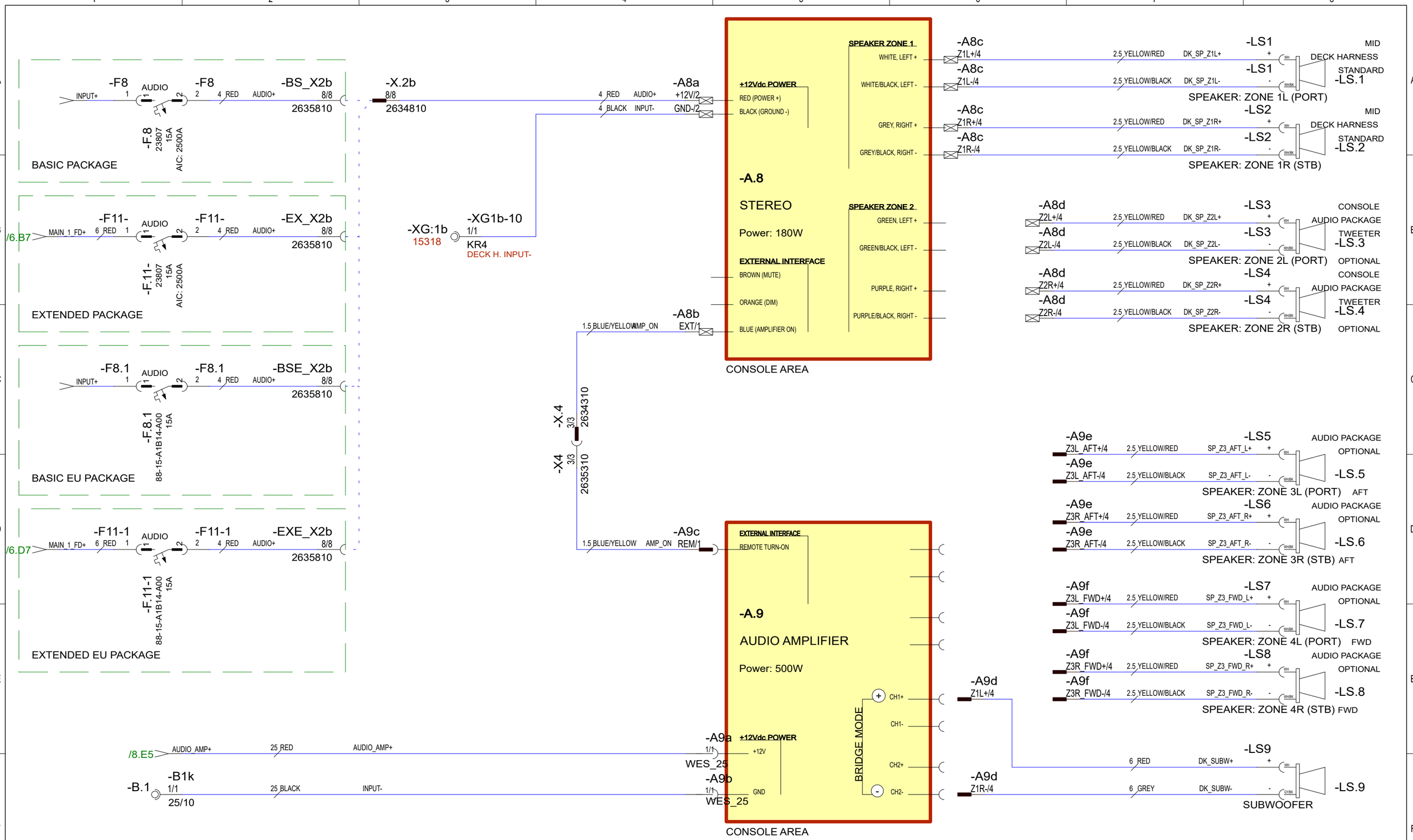

10.9.2024	PF	A1: 2005200; Introduced drawing	Date	10.9.2024	NAVIX	Axopar		
			Drawing by	TuM		Boat	Sub-product code	Product code	Project ID
			Sheet rev.	1		22-E (Breeze)	DIAGRAM - AUDIO SYSTEM	HL	22 / 26
Date of modification	Modified by	Description	Project rev.	A	Copyright by	Boat model	Title	Loc	Sheet

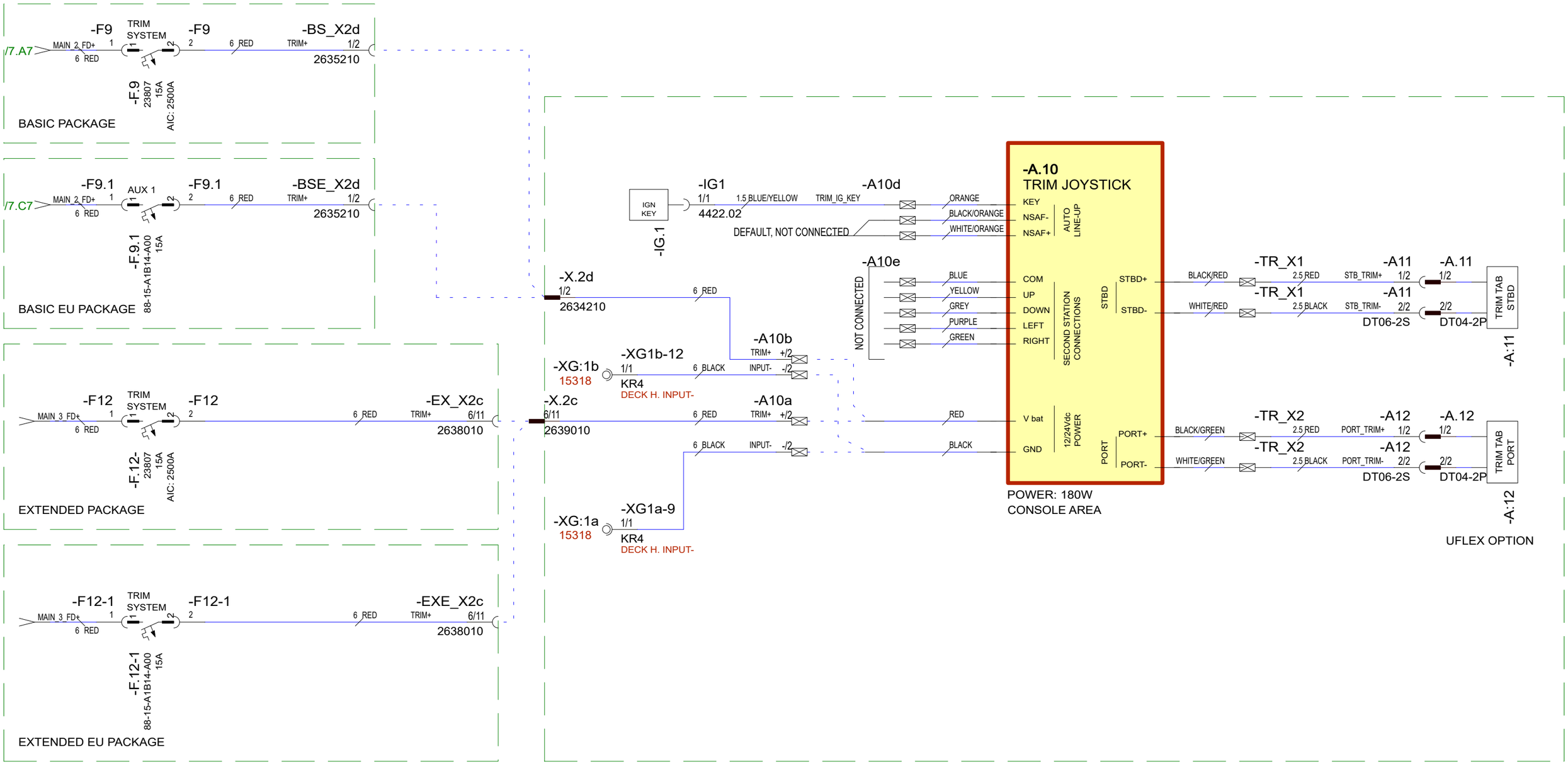

12VDC

10.9.2024	PF	A1: 2005200; Introduced drawing	Date	10.9.2024	NAVIX	Axopar			
			Drawing by	TuM		Boat	Sub-product code	Product code	Project ID
			Sheet rev.	1		22-E (Breeze)	DIAGRAM - TRIM SYSTEM	HL	23 / 26
Date of modification	Modified by	Description	Project rev.	A	Copyright by	Boat model	Title	Loc	Sheet

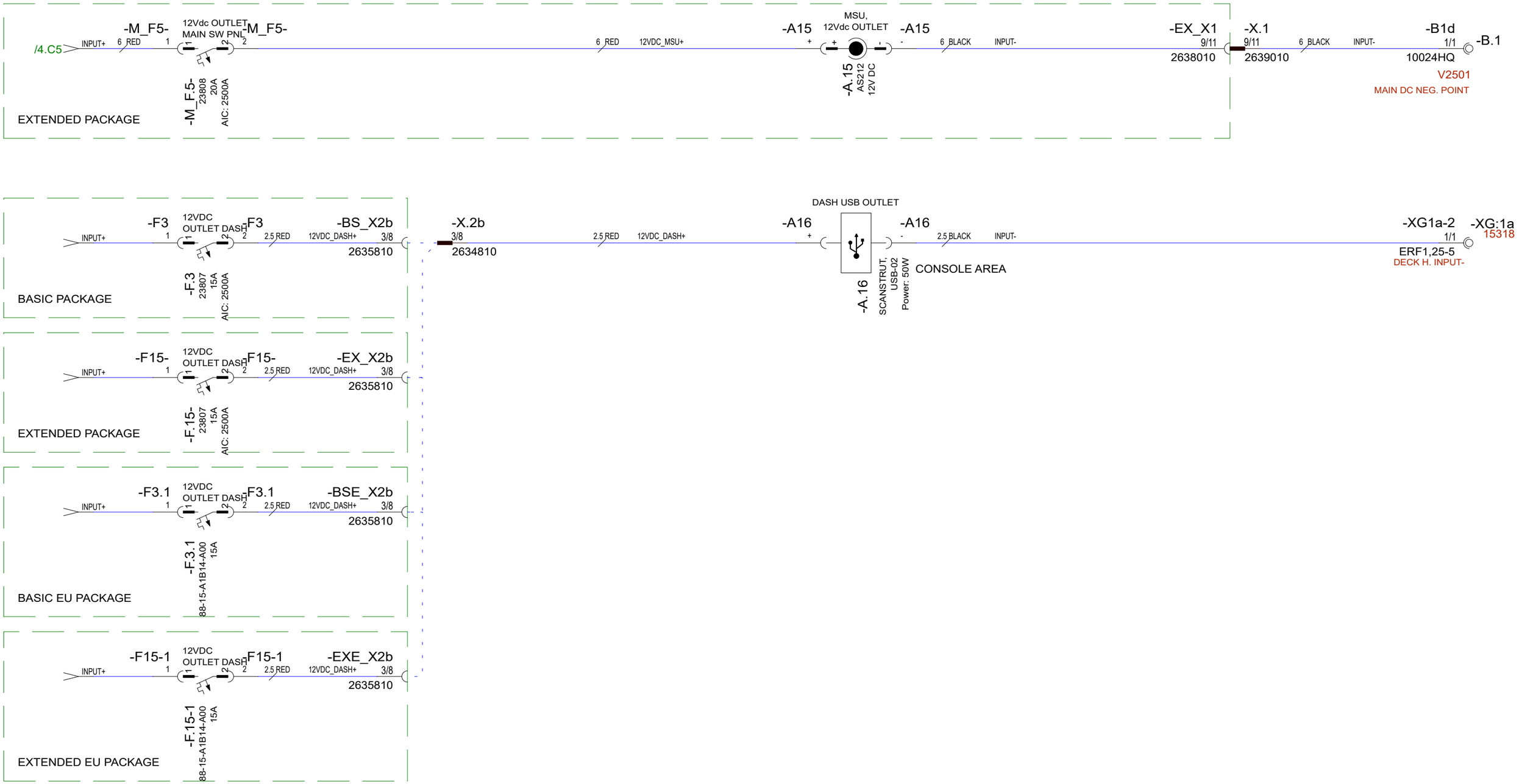

12VDC

10.9.2024	PF	A1: 2005200; Introduced drawing	Date	10.9.2024	NAVIX	Axopar		
			Drawing by	TuM		Boat	Sub-product code	Product code	Project ID
			Sheet rev.	1		22-E (Breeze)	DIAGRAM - 12Vdc SOCKETS	HL	24 / 26
Date of modification	Modified by	Description	Project rev.	A	Copyright by	Boat model	Title	Loc	Sheet

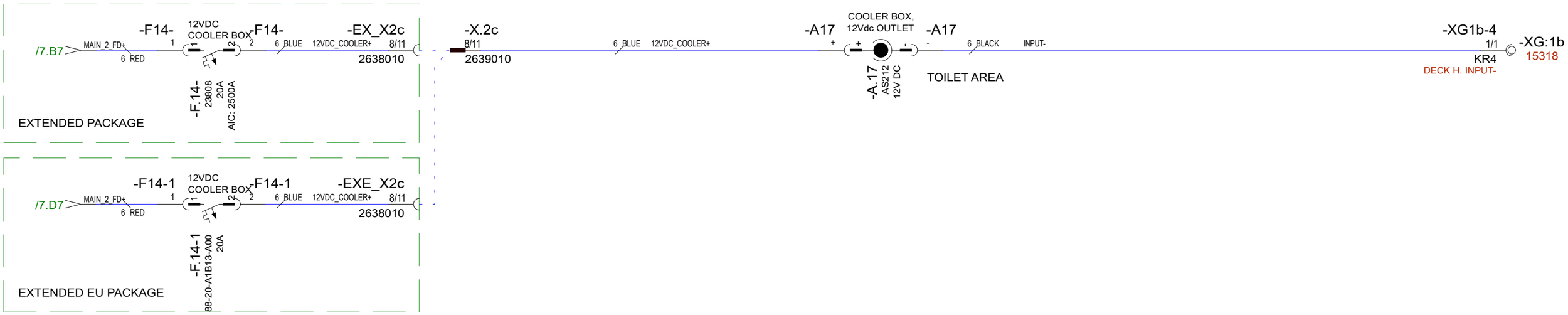

12VDC

10.9.2024	PF	A1: 2005200; Introduced drawing	Date 10.9.2024	NAVIX	Axopar			
			Drawing by TuM		Boat	Sub-product code	Product code	Project ID
			Sheet rev. 1		22-E (Breeze)	DIAGRAM - 12Vdc SOCKETS	HL	25 / 26
Date of modification	Modified by	Description	Project rev. A	Copyright by	Boat model	Title	Loc	Sheet

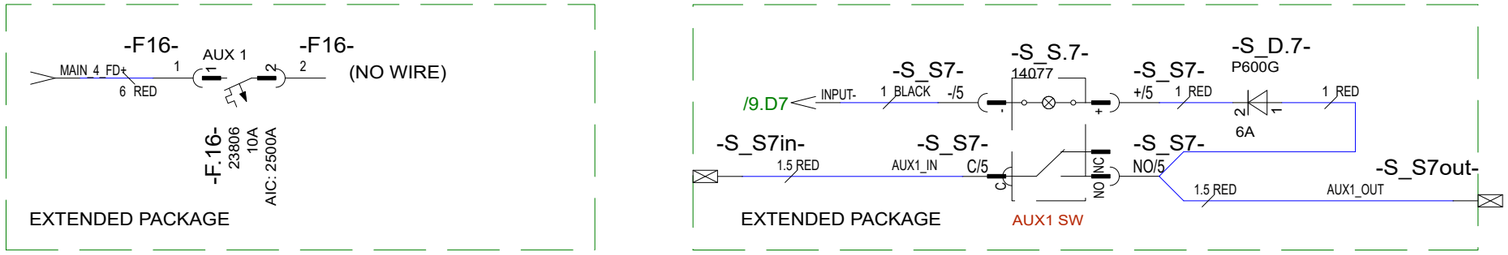

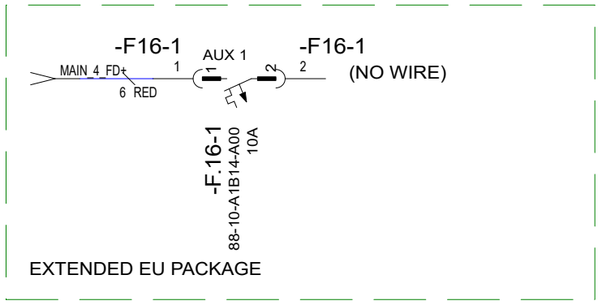

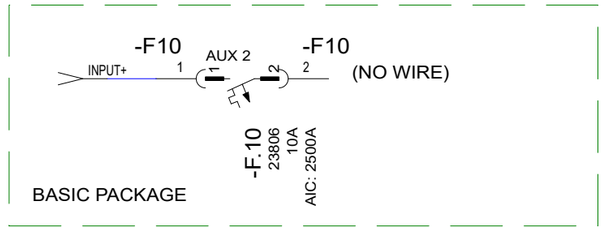

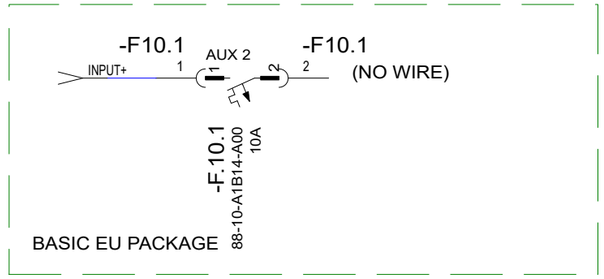

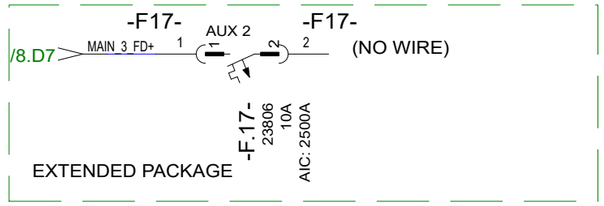

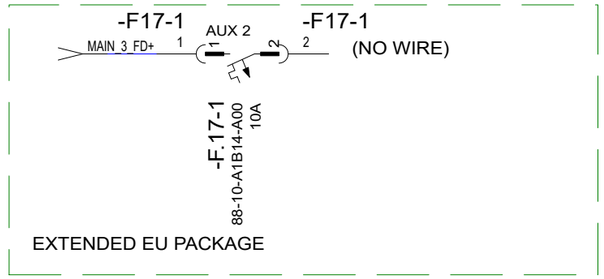

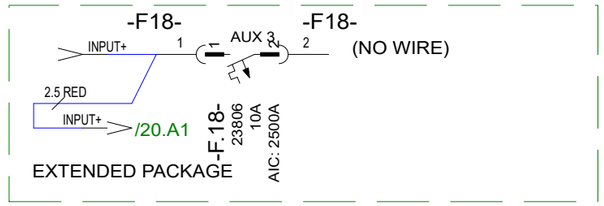

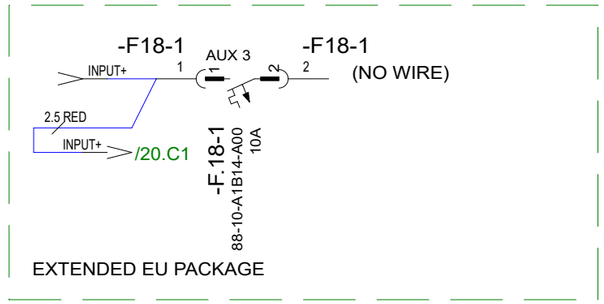

12VDC

10.9.2024	PF	A1: 2005200; Introduced drawing	Date 10.9.2024	NAVIX	Axopar			
			Drawing by TuM		Boat	Sub-product code	Product code	Project ID
			Sheet rev. 1		22-E (Breeze)	DIAGRAM - AUX	HL	26 / 26
Date of modification	Modified by	Description	Project rev. A	Copyright by	Boat model	Title	Loc	Sheet

11 Appendix III: AIS Decontamination – North America

© 2026 Axopar Boats

Table of Contents

1 Decontamination criteria based on UMPS III, Table 3 3

2 Example of AIS Owner's Manual Information 4

3 Additional boat-specific recommendations 6

© 2021 Axopar Boats

1 Decontamination criteria based on UMPS III, Table 3

The table is a summary of scientific research indicating the lethal water temperature at point of contact and duration for decontamination. Information is grouped by the location of the boat that is targeted and the life form of Dreissenid mussel targeted (e.g., adult mussel or veliger). Please refer to the *Student Training Curriculum for Watercraft Inspectors and Decontaminators to Prevent and Contain the Spread of Aquatic Invasive Species in the USA* for complete step by step procedures.

	Boat part/ location	**Water temperature**	**Duration[1)] (sec)**	**Type of application**	**Target life stage**
Exterior	Hull	140°F	10	High pressure spray[2)]	Adult
	Trailer	140°F	70	Low pressure spray[3)]	Adult
	PFDs, anchor, paddle	140°F	10	Low pressure spray	Adult or Veliger
Propulsion system	Gimbal	140°F	132	Low pressure spray	Adult
	Engine	140°F[5), 6)]	See note[7)].	Flush[6)]	Veliger
Interior	Ballast tanks	120°F	130	*Low risk* – Flush[4)] *High risk* – Fill and flush	Veliger
	Live well/bait well	120°F	130	Low pressure spray or flush	Veliger
	Bilge	120°F	130	Flush or low pressure spray	Veliger

1) The times listed are the minimum times necessary to achieve mortality.

2) High pressure = 3000 psi.

3) Low pressure = using the pressure from the decontamination unit with no nozzle, not to exceed 60 psi (essentially a garden hose flow).

4) Flush = adding water to a compartment of a boat to treat or force the water out.

5) These temperatures denote the exit temperature (i.e., temperature of water exiting the boat not exiting the wand or flush attachment).

6) When flushing engines with a dedicated connection (not muffs), the pressure should be limited to less than 60 psi to prevent internal engine damage. The maximum input temperature during flushing should not exceed 140°F.

7) *NOTE: Engine flushing relies on the exit temperature as a guideline for decontamination duration.*

© 2021 Axopar Boats

2 Example of AIS Owner's Manual Information

Aquatic invasive species

Aquatic invasive species (AIS) are plants and animals that occur in waters in which they are not native and whose introduction causes or is likely to cause economic or environmental damage or harm to human health. AIS have a negative impact on the waterway, its native species, and recreational and commercial uses of the waterway.

As responsible boaters and citizens, each boat owner should do their part to prevent the spread of these aquatichitchhikers. In many cases, it is also required by law. Check local regulations for any waterway where you will boat.

After each boating trip, follow these three simple steps before you leave the water access to stop the spread of AIS: Clean, Drain, and Dry. This is the boater's way to help protect the environment from the damage that AIS can cause.

Clean

Inspect and remove all aquatic plants, animals, mud, and debris from the boat, engine, trailer, anchor, and any watersports equipment.

- Rinse, scrub or wash, as appropriate, away from storm drains, ditches, or waterways.
- Rinse watercraft, trailer, and equipment with hot water, when possible.
- Flush motor according to owner's manual.

Drain

Completely drain all water from the boat and its compartments, including but not limited to the bilge, wells, lockers, ballast tanks or bags, bait containers, engines, and outdrives.

Dry

Allow the boat to completely dry before visiting any other bodies of water.

© 2021 Axopar Boats

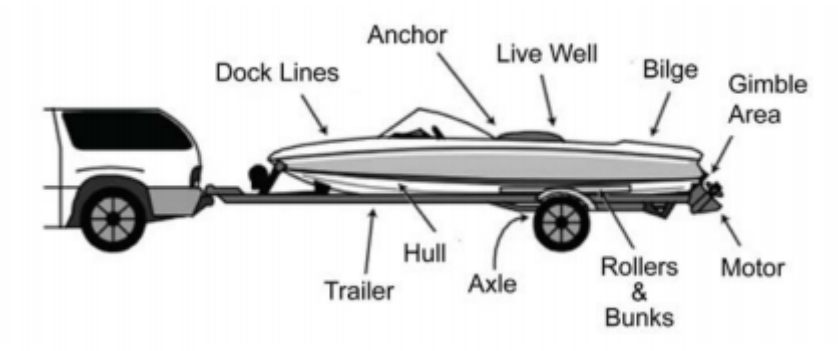

NOTE: Some localities may require inspection or decontamination before and/or after launching. Check state and local laws and regulations for requirements prior to traveling to go boating.

3 Additional boat-specific recommendations

Nonmotorized watercraft

Canoes, rafts, kayaks, rowboats, paddleboats, inflatables, sculls, and other nonmotorized recreational watercraft also require proper treatment.

- **Clean** straps, gear, paddles, floats, ropes, anchors, dip nets, and trailer before leaving the water body.
- **Dry** everything completely between each use and before storing.
- **Wear** quick-dry footwear or bring a second pair of footwear with you when portaging between waterbodies.

Sailboats

- **Clean** centerboard, bilge board, wells, rudderpost, trailer, and other equipment before leaving the water body.
- **Drain** water from boat, motor, bilge, ballast, wells, and portable bait containers before leaving the water body.

Motorized watercraft

- **Inspect** and **clean** motor or engine, including the gimbal area; trailer, including axles, bunkers, and rollers; anchors; dock lines; and equipment before leaving the water body.
- **Drain** live wells, bait containers, ballast and bilge tanks, and engine cooling systems.

Jet boats and personal watercraft (PWCs)

- **Inspect** and **clean** hull, trailer, intake grate, and steering nozzle, etc.
- **Clean** hull, trailer, intake grate, and steering nozzle, etc before leaving the water access.
- **Run** engine 5-10 sec to blow out excess water and vegetation from internal drive before leaving the waterbody.

© 2021 Axopar Boats

12 Appendix IV: Transport dimensions

© 2026 Axopar Boats

AX/E 22 SPYDER

SIDE VIEW

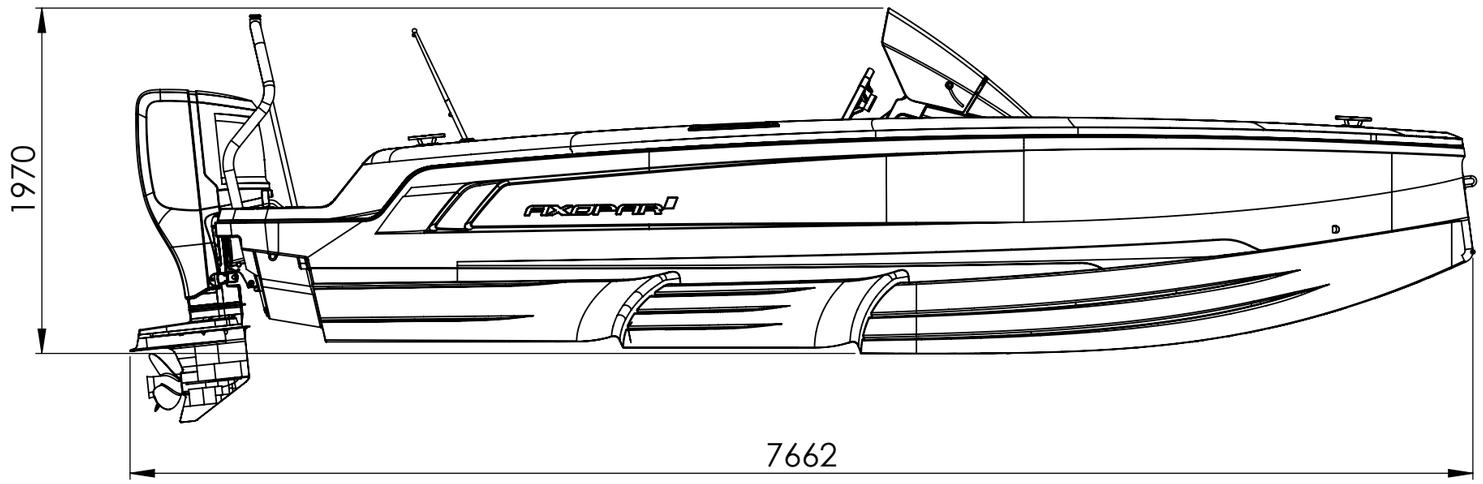

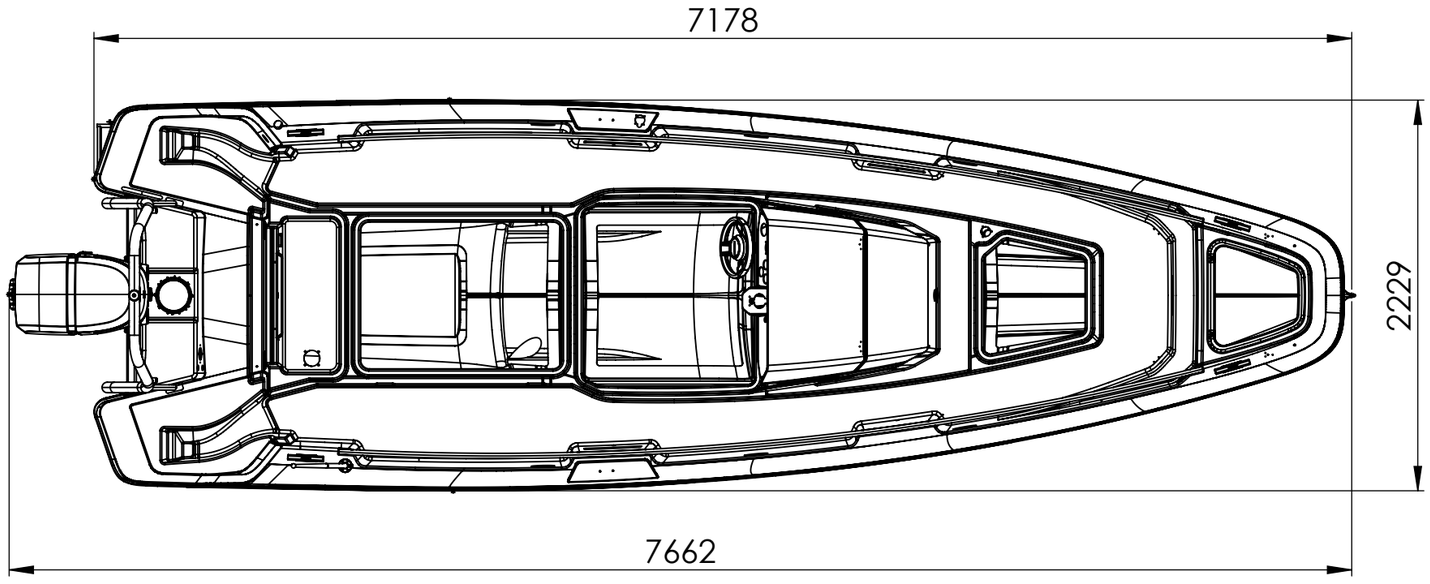

TOP VIEW

AX/E 22 SPYDER

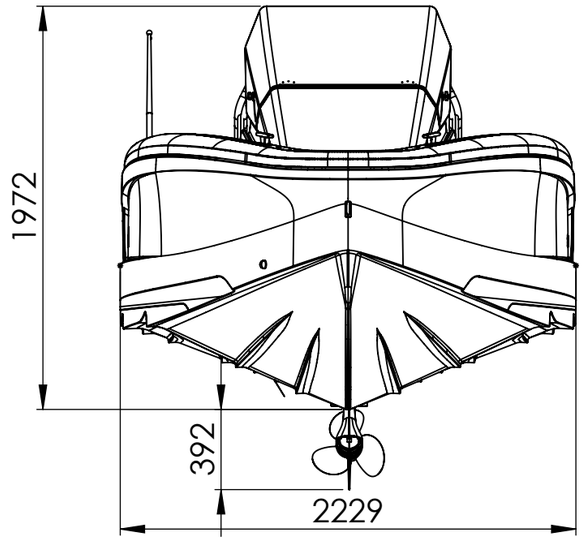

FRONT VIEW

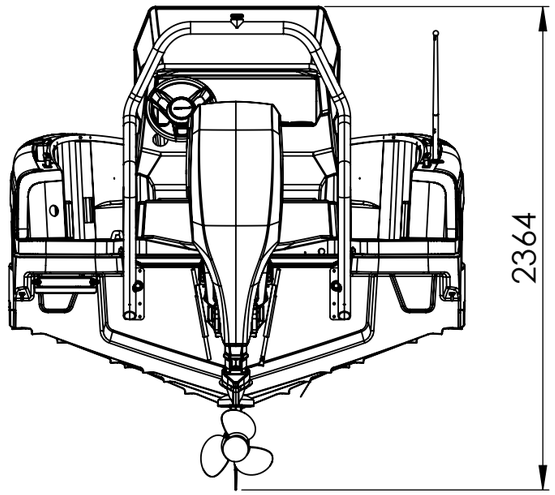

AXOPAR 22 RANGE - TRANSPORT CRADLE

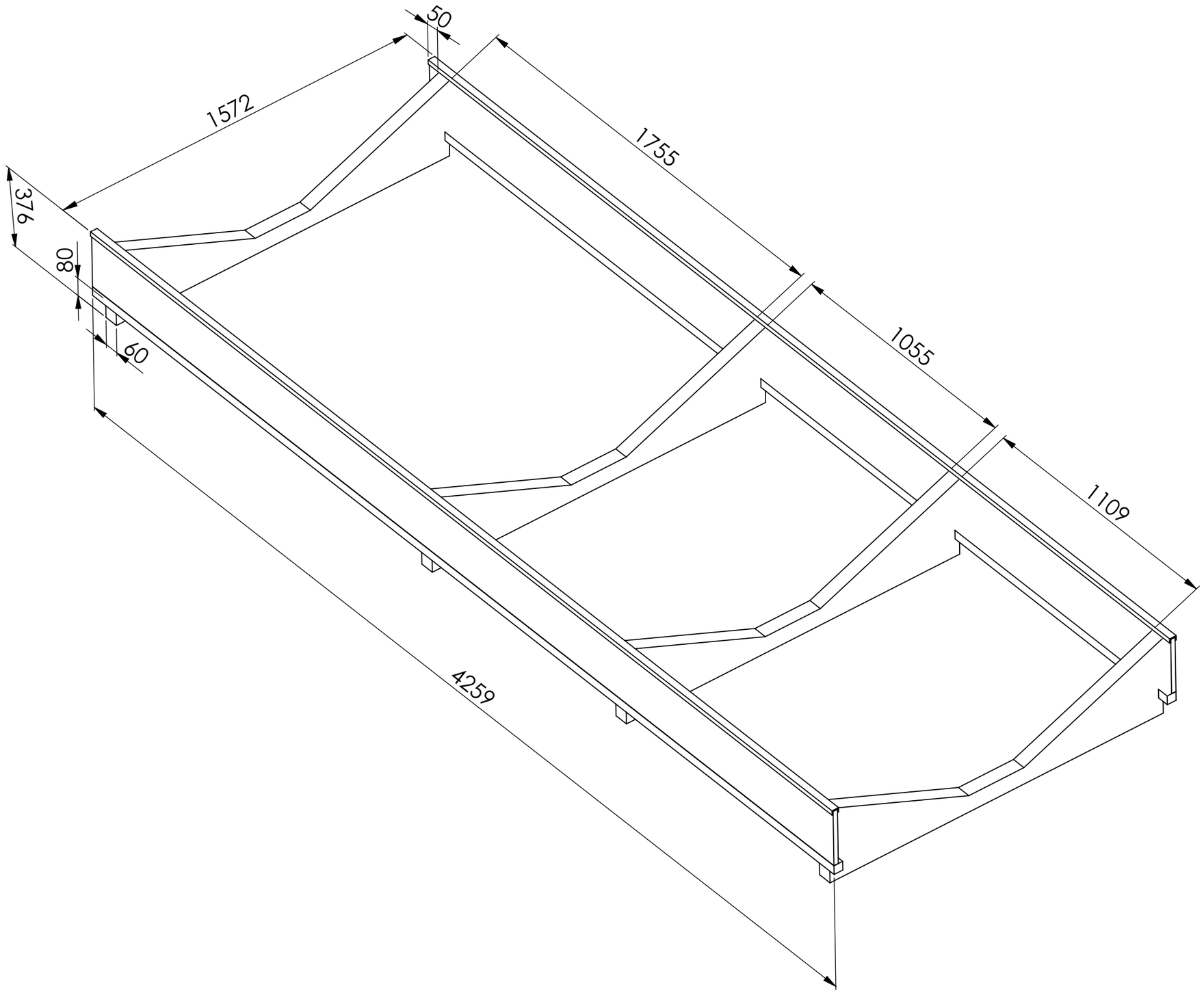

AXOPAR 22 RANGE - STRAPPING

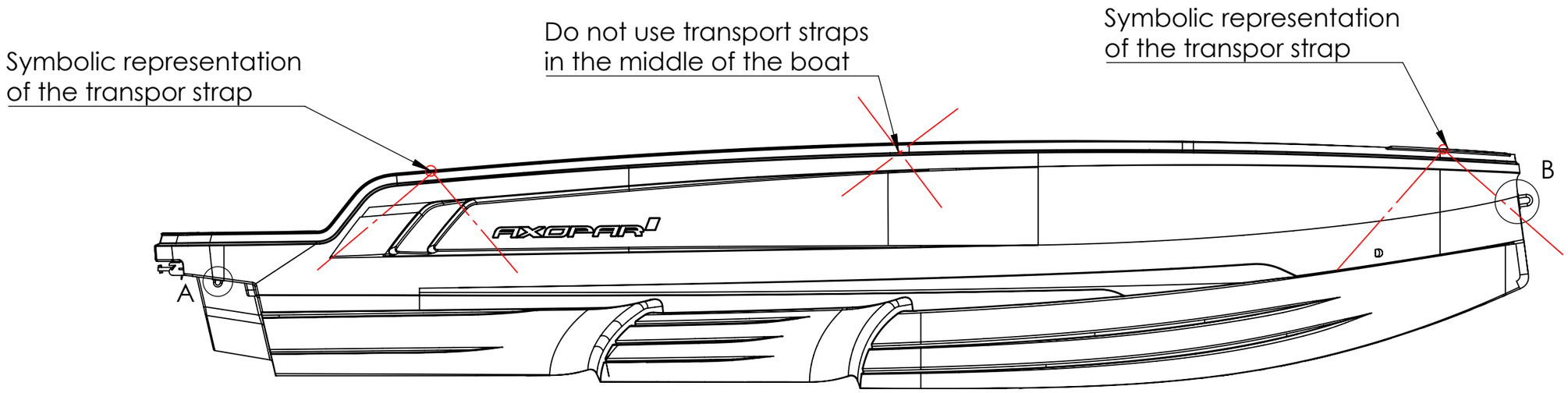

Use dedicated hooks for
transport straps whenever
available

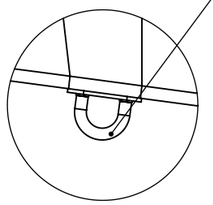

DETAIL A
SCALE 1 : 5

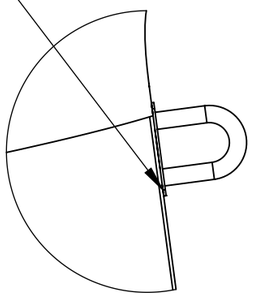

DETAIL B
SCALE 1 : 5

NOTE
- For transporting and securing the boat use transport straps only in the indicated places (aft and bow side)

AX/E 22 T-TOP

SIDE VIEW

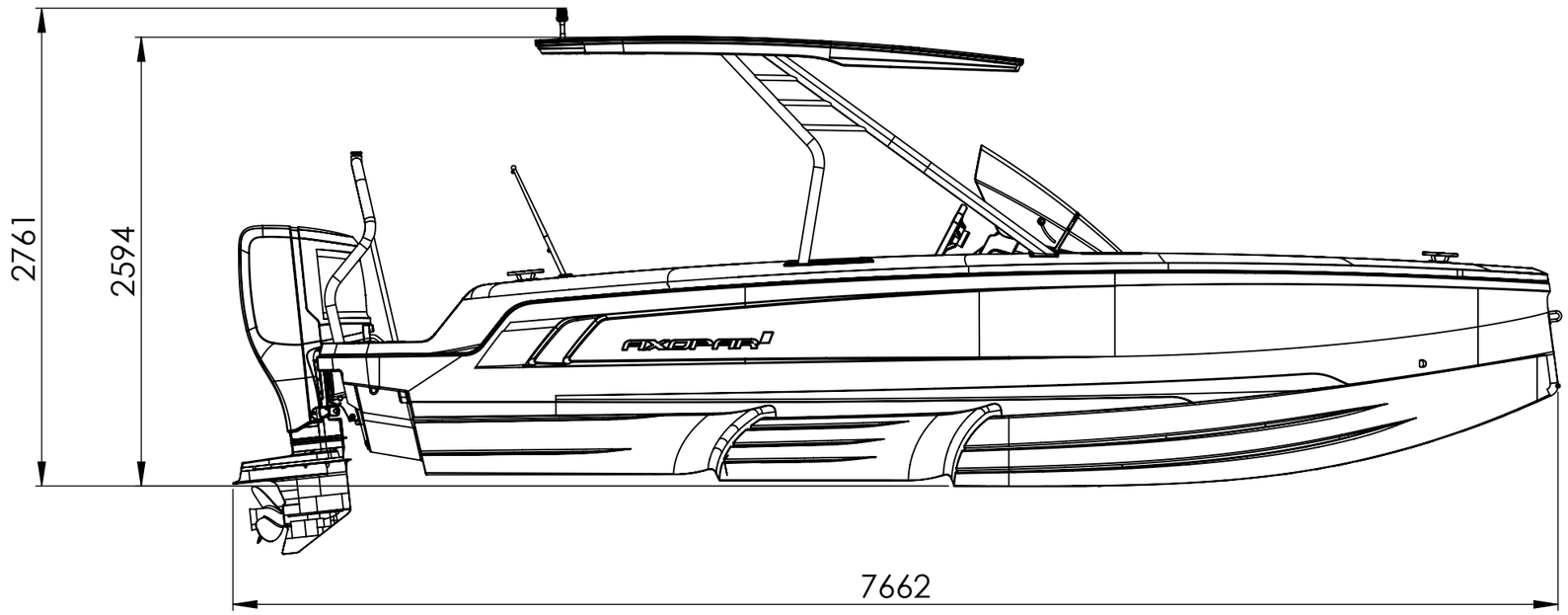

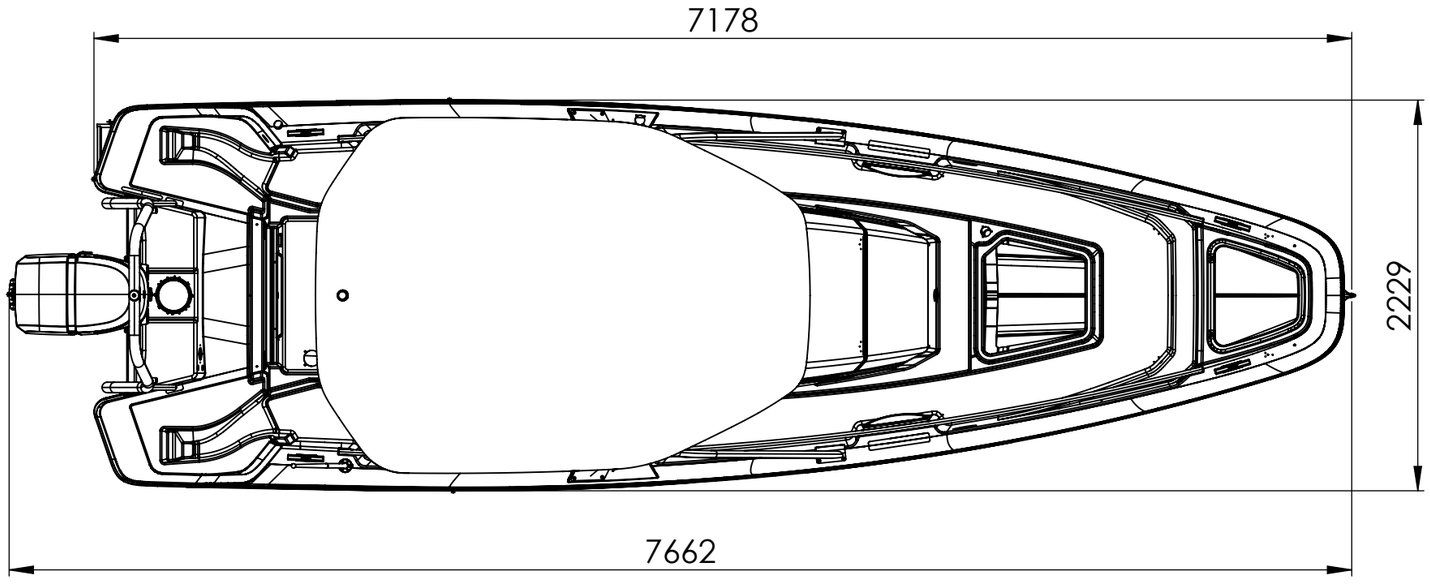

TOP VIEW

AX/E 22 T-TOP

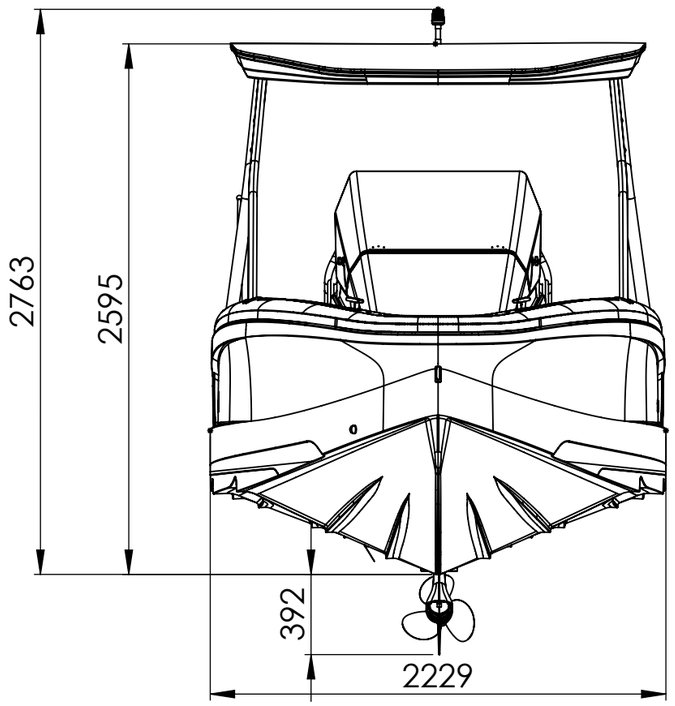

FRONT VIEW

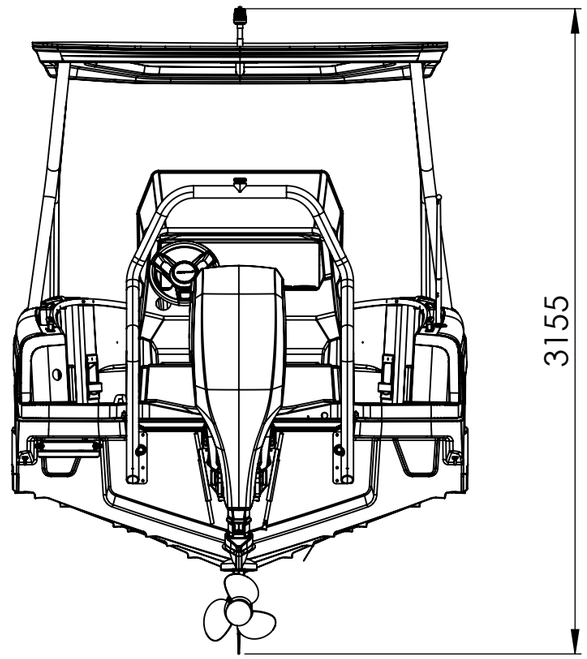

AXOPAR 22 RANGE - TRANSPORT CRADLE

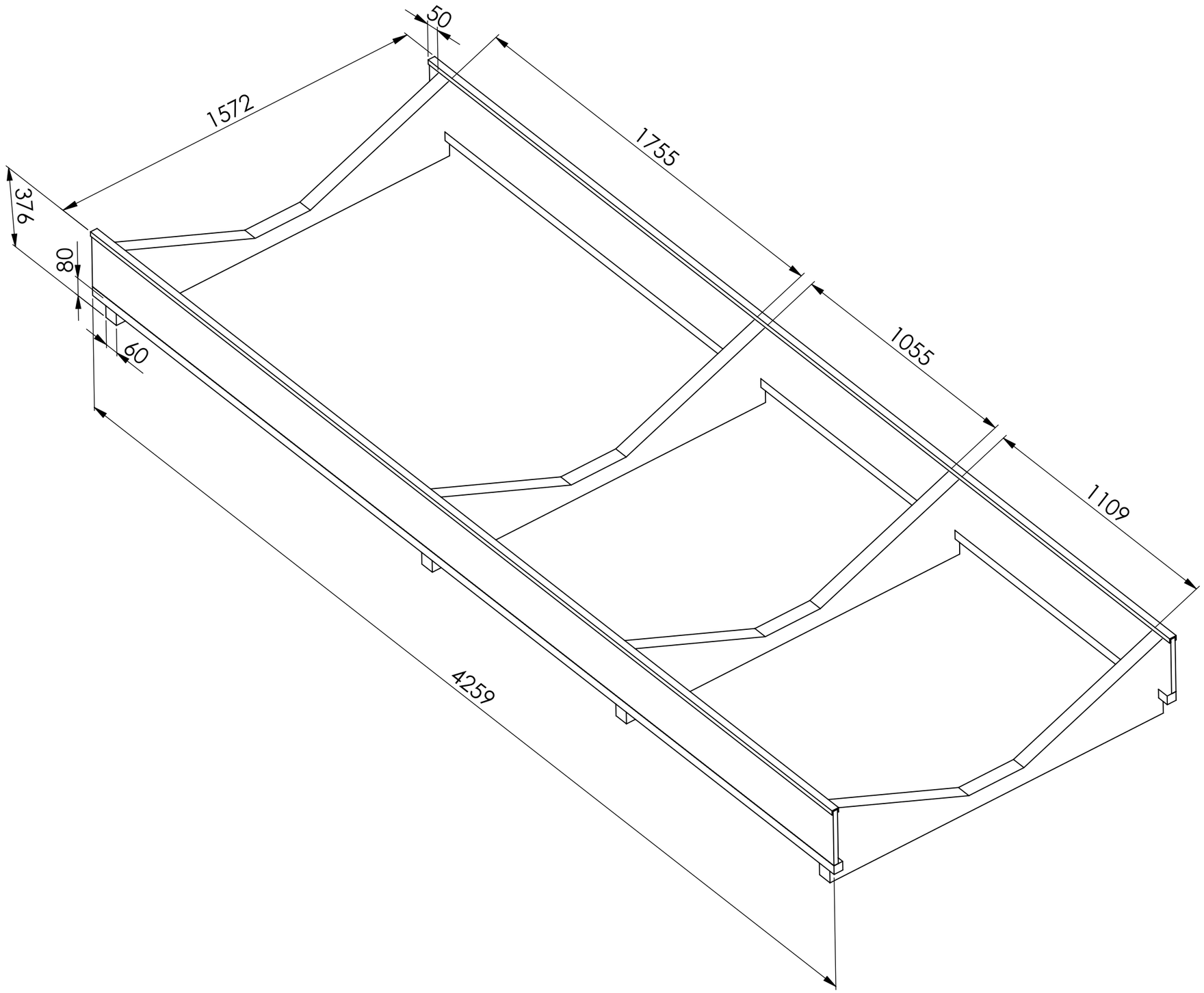

AXOPAR 22 RANGE - STRAPPING

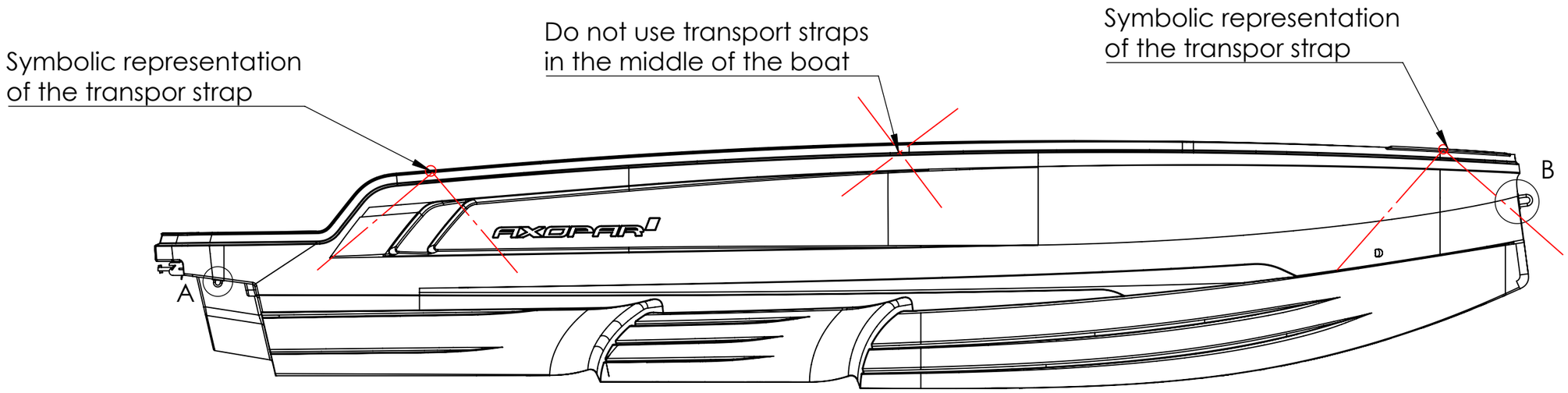

Use dedicated hooks for
transport straps whenever
available

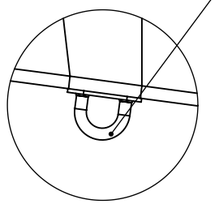

DETAIL A
SCALE 1 : 5

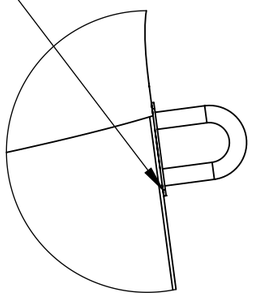

DETAIL B
SCALE 1 : 5

NOTE
- For transporting and securing the boat use transport straps only in the indicated places (aft and bow side)

13 Appendix V: Warranty terms

© 2026 Axopar Boats

13.1 Warranty terms: US

© 2026 Axopar Boats

AXOPAR

Limited Warranty for Axopar Boats

US version 1.0

IMPORTANT NOTICE: THIS LIMITED WARRANTY IS SUBJECT TO BINDING ARBITRATION AND A WAIVER OF CLASS ACTIONS, AS DESCRIBED IN SECTION 7. Please also read the limitations and disclaimers in Sections 3(D), 3(E) and 6 regarding Boats.

Limited Warranty

Axopar Boats Ltd ("*Axopar*") warrants to the original retail purchaser ("*Purchaser*") of an Axopar boat manufactured and equipped with a hull identification number by Axopar ("*Boat*") and sold at retail by an authorized dealer ("*Dealer*") that Axopar will repair or replace defective materials and workmanship found during the applicable warranty period, subject to the limitations, exclusions and other conditions provided below. The decision to repair or replace will be made by Axopar in its sole discretion, and all repairs must occur at the location specified by Axopar (the "*Service Location*"). This Limited Warranty gives the Purchaser specific legal rights and Purchaser may have other legal rights, which vary from state to state.

1. Applicability

This Limited Warranty is valid worldwide during the applicable warranty period and applies only to Boats purchased by consumers and operated under normal, non-commercial use in compliance with the relevant owner's manual. Any warranty for Boats intended for commercial use must be separately agreed upon in writing between Axopar and the Purchaser.

The Limited Warranty also covers any equipment installed in the Boat by Axopar as an integral part of the delivery but excludes (i) equipment covered by a separate warranty, as further specified below in Sections 2 (Warranty Provider) and 3 (Warranty Period and Limitations) and (ii) any items installed by the Dealer in the Boat or included by the Dealer with the Boat. Equipment acquired by the Purchaser from third parties and which are not included in the original delivery are not covered under this Limited Warranty.

The hull identification number of the Boat and other particulars relevant to this Limited Warranty are recorded in the applicable sales contract and/or in the Boat's warranty certificate.

2. Warranty Provider

This Limited Warranty is provided solely by Axopar. Contact details are shown in the warranty certificate provided to the Purchaser upon delivery of the Boat. All warranties provided by the manufacturers and distributors of components, equipment and parts of the Boat are hereby assigned to the Purchaser to the extent permitted by the applicable manufacturers and distributors, as Purchaser's sole and exclusive remedy with respect to those items.

3. Warranty Period and Limitations

The Limited Warranty is valid from the delivery date of the Boat to the Purchaser, as reflected in the Boat's warranty certificate (the "*Delivery Date*"), for the time periods identified below.

(A) ***Five-Year Limited Warranty on Structural Hull:***

Axopar will repair or replace any substantial defect in material or workmanship in the Boat's structural hull that is reported within five years from the Delivery Date. The structural hull means the fiberglass molded shell and all its integral structural components. A defect is substantial if it causes the Boat to be unfit or unsafe for general use as a pleasure craft under normal operating conditions.

(B) ***Two-Year Limited Warranty on Components Manufactured or Installed by Axopar:***

Axopar will repair or replace any components manufactured or installed by Axopar that are defective in factory materials or workmanship and are reported within two years from the Delivery Date (and are not already addressed in the specific warranties provided in paragraphs (A) and (C)).

(C) ***One-Year Limited Warranty on Upholstered Items, Canvas, Floor Materials, Other Coating and Painted Parts:***

Axopar will repair or replace any upholstered items, canvas, floor materials, other coating, and painted parts manufactured or installed by Axopar that are defective in factory materials or workmanship and are reported within one year from the Delivery Date.

(D) ***Exclusions***

The Limited Warranty does not apply to or cover the following items: (1) any costs incurred from hauling or transporting the Boat to and from the Service Location; (2) any equipment, parts or accessories not installed by Axopar or that carry their own individual warranties provided by third parties, including but not limited to engines, propellers, pre-rigging equipment, batteries, generators, A/C units, steering mechanisms and other electronic equipment; (3) minor changes to the Boat's external surfaces that have no influence on the strength or serviceability of the Boat, including but not limited to any damage, deterioration, fading or discoloration or mold of cushions, cracking, fading or oxidation of gel coat, stress lines, anti-fouling bottom paint or other slight irregularities in paint work, lacquer work, woodwork or chrome finish or other minor surface blemishes; (4) windshield damage or leakage; (5) any damage resulting from Purchaser's or a third party's negligence, willful misconduct, improper use of the Boat, overloading, powering in excess of the recommended maximum horsepower, improper rigging, misuse or alterations or repairs or attempted repairs on the Boat not authorized by Axopar, including use of an improper trailer, Boat lift or sling; (6) failure of the Purchaser or any third party to use, maintain or store the Boat as specified in the owner's manual, or any other failure to provide reasonable care and maintenance; (7) normal wear and tear items, including but not limited to ropes, filters, bulbs and batteries; (8) any representation or implication of the Boat's properties or characteristics, such as speed, weight, range, performance or fuel consumption; (9) any failure or defect not reported to Axopar or Dealer in accordance with Section 4 (Warranty Procedures) of this Limited Warranty; (10) any failure or defect arising from repairs made by unauthorized service providers; (11) any failure or defect arising from acts of nature; and (12) any Boat that was previously salvaged or declared a total loss or constructive loss for any reason.

(E) ***Voiding the Limited Warranty***

This warranty becomes void if: (1) Purchaser sells or otherwise conveys the Boat to a third party during the warranty period and Axopar is not provided with the bill of sale of the Boat and/or the contact information of the new owner; (2) Purchaser uses the Boat in other than non-commercial activities; (3) the Boat is used in a competitive event; (4) any unauthorized modifications or changes are made to the Boat (e.g. structural modification or modifications to electrical systems on board or the programming of its engine or other systems); or (5) the Boat is salvaged or declared a total loss or constructive loss for any reason.

4. Warranty Procedures

To obtain warranty service, Purchaser must notify the Dealer about the failure or defect within a reasonable time after becoming aware of it or after Purchaser should have become aware of it. Upon detecting a defect, the Purchaser is required to take all reasonable steps necessary to prevent the defect from deteriorating further. When reporting any defect, the Purchaser must provide the Boat's hull identification number, a copy of the warranty certificate, a reasonable number of clear and detailed photos of the defect, and a supported or documented explanation regarding when the Boat was purchased and the Dealer from which it was purchased.

After providing notice of the defect to the Dealer, the Dealer will notify Purchaser of the procedures to follow regarding this Limited Warranty. Dealer will then notify Axopar, and upon being notified of the warranty claim by Dealer, Axopar is solely responsible for determining and authorizing in writing the remedial action to be performed.

5. Axopar's Warranty Responsibilities

Axopar has always the right to repair a defect covered by this Limited Warranty if, in view of the nature and extent of the defect, it can be done within a reasonable time and in such a way that it does not result in repair costs or material detriment to the Purchaser. All repairs shall be carried out in a way and at the Service Location designated by Axopar.

If Axopar determines that repair is not possible, Purchaser has the right to a discount proportionate to the defect. Alternatively, Axopar may, in its sole discretion, offer to Purchaser a replacement Boat with a market value equal to the replaced Boat's market value (considering the Boat's age and condition) if it did not have that specific unrepairable defect.

If Axopar reasonably determines that the Boat defect is not covered by the Limited Warranty, Axopar has the right to charge the Purchaser for any costs that arise from inspecting and determining the defect and its cause. Any repair costs and expenses are subject mutual agreement by Axopar and the Purchaser.

6. Sole Remedy and Other Limitations

The repair, discount and replacement obligations specified in Section 5 (Axopar's Warranty Responsibilities) for parts or materials covered by this Limited Warranty are Purchaser's sole and exclusive remedy, and Axopar's sole obligations, for any claims whatsoever or any losses resulting from product failure.

This Limited Warranty the final, complete and exclusive warranty offered by Axopar regarding the Boat, and no other person or entity (including the Dealer or their respective sales agents or employees) is authorized to make any other warranties or representations on behalf of Axopar. **EXCEPT FOR THE EXPRESS LIMITED WARRANTIES PROVIDED IN THIS LIMITED WARRANTY, AXOPAR DISCLAIMS ALL OTHER EXPRESS AND IMPLIED WARRANTIES AND REPRESENTATIONS OF ANY KIND, INCLUDING ANY IMPLIED WARRANTY OF MERCHANTABILITY, AND FITNESS FOR A PARTICULAR PURPOSE. EXCEPT AS OTHERWISE PROVIDED IN THIS LIMITED WARRANTY, ALL BOATS ARE PROVIDED "AS IS" AND "WITH ALL FAULTS".** If and to the extent that an implied warranty cannot be disclaimed, that warranty is limited to duration of the respective express Limited Warranty provided herein. Some states do not allow the exclusion of implied warranties or do not allow limitations on the amount of time an implied warranty lasts, so the above limitations may not apply to some Purchasers.

To the extent permitted by applicable law, Axopar disclaims all liability to Purchaser and third parties for any economic loss arising from claims of product failure, negligence, defective design, lack of seaworthiness, manufacturing defect and any other liability not expressly covered in this Limited Warranty. **TO THE EXTENT PERMITTED BY APPLICABLE LAW, NEITHER AXOPAR NOR DEALER SHALL UNDER ANY CIRCUMSTANCES BE LIABLE FOR ANY INDIRECT, CONSEQUENTIAL, SPECIAL, ENHANCED, OR PUNITIVE DAMAGES, INCLUDING LOSS OF THE BOAT, PROFIT, PRODUCTIVITY, BUSINESS, CONTRACTS, REVENUES OR ANTICIPATED SAVINGS, OR INCREASED COSTS OR EXPENSES, AND IN NO EVENT SHALL AXOPAR'S LIABILITY EXCEED THE ACTUAL AMOUNT PAID BY PURCHASER FOR THE BOAT.** Some states do not allow the exclusion or limitation of incidental or consequential damages, so the above limitation or exclusion may not apply to every Purchaser.

If, at any time, any provision of this Limited Warranty is or becomes illegal, invalid or unenforceable in any respect under the laws of any jurisdiction, the legality, validity or enforceability of the remaining provisions will remain unaffected.

7. Arbitration and Limitation on Actions

PLEASE READ THIS SECTION CAREFULLY. WE WANT YOU TO KNOW HOW IT AFFECTS YOUR RIGHTS.

(A) *Customer Service and FAQs*

In the unlikely event that an issue, concern or claim (including legal claims) remains unresolved after the procedure specified in Section 4 (Warranty Procedures) and the issue has been escalated to Axopar, Purchaser and Axopar each agree to discuss any issue informally for at least 30 days. Purchaser can do this by sending your full name and contact information, your concern and your requested solution to Axopar at warranty@axopar.fi, Attn: Legal Department. If Axopar would like to discuss an issue with Purchaser, Axopar will contact you at the address provided to the Dealer.

(B) *Agreement to Arbitrate*

If an agreed solution is not reached at the end of the 30-day discussion period, Purchaser and Axopar each agree that any issue, concern or claim (including legal claims) that either may have arising out of or relating to this Limited Warranty must be resolved through final binding arbitration before the American Arbitration Association using its Consumer Arbitration Rules, available at https://www.adr.org/sites/default/files/Consumer%20Rules.pdf (the "*AAA Rules*") or available by calling the American Arbitration

Association at 1-800-778-7879. As an exception to this agreement to arbitrate, Axopar gives you the right to pursue in small claims court any claim that is within that court's jurisdiction, so long as you proceed solely on an individual basis. A party who intends to seek arbitration must first send to the other party, by certified or registered mail, a written notice of dispute. Purchaser may download or copy a form notice of dispute and a form to initiate arbitration from www.adr.org. Unless Purchaser and Axopar agree otherwise, the arbitration hearings will take place in a reasonably convenient location for both parties as determined by the arbitrator in accordance with the AAA Rules, and the hearings may be conducted in-person, by videoconference, phone or by the exchange of documents. The arbitrator's decision will be binding and may be enforced and entered as a judgment in any court of competent jurisdiction. If the arbitrator rules against Axopar, Axopar will reimburse Purchaser for reasonable attorneys' fees and costs, regardless of who initiated the arbitration. However, if the arbitrator rules in Axopar's favor, Axopar will not seek reimbursement of attorneys' fees and costs, regardless of who initiated the arbitration.

(C) *Time Limitation; No Class Actions*

To help resolve any issues between us promptly and directly, Axopar and Purchaser agree to begin any arbitration under this Limited Warranty within one year after the claim first arose; otherwise, the claim is waived. Axopar and Purchaser also agree to arbitrate in each of our individual capacities only – not as a representative or member of a class – and each of us expressly waives any right to file a class action or seek relief on a class action basis. Furthermore, unless Purchaser and Axopar agree in writing, the arbitrator may not consolidate more than one person's claims and may not otherwise preside over any form of a representative of class proceeding.

(D) *Confidentiality*

All arbitration proceedings are confidential, unless both Purchaser and Axopar agree otherwise. Arbitration orders and awards required to be filed with applicable courts of competent jurisdiction are not confidential and may be disclosed by the parties to such courts. A party who improperly discloses confidential information will be subject to sanctions. The arbitrator and forum may disclose case filings, case dispositions, and other case information as required by a court order of proper jurisdiction.

13.2 Warranty terms: non-US

© 2026 Axopar Boats

AXOPAR

Limited Warranty for Axopar Boats

Non-US version 1.0

Limited Warranty

Axopar Boats Ltd ("*Axopar*") warrants to the original retail purchaser ("*Purchaser*") of an Axopar boat manufactured and equipped with a hull identification number by Axopar ("*Boat*") and sold at retail by an authorized dealer ("*Dealer*") that Axopar will repair or replace defective materials and workmanship found during the applicable warranty period, subject to the limitations, exclusions and other conditions provided below. The decision to repair or replace will be made by Axopar in its sole discretion, and all repairs must occur at the location specified by Axopar (the "*Service Location*"). This Limited Warranty gives the Purchaser specific legal rights and Purchaser may have other legal rights, which vary from country to country.

1. Applicability

This Limited Warranty is valid worldwide during the applicable warranty period and applies only to Boats purchased by consumers and operated under normal, non-commercial use in compliance with the relevant Axopar owner's manual. Any warranty for Boats intended for commercial use must be separately agreed upon in writing between Axopar and the Purchaser.

The Limited Warranty also covers any equipment installed in the Boat by Axopar as an integral part of the delivery but excludes (i) equipment covered by a separate warranty, as further specified below in Sections 2 (Warranty Provider) and 3 (Warranty Period and Limitations) and (ii) any items installed by the Dealer in the Boat or included by the Dealer with the Boat. Equipment acquired by the Purchaser from third parties and which are not included in the original delivery are not covered under this Limited Warranty.

The hull identification number of the Boat and other particulars relevant to this Limited Warranty are recorded in the applicable sales contract and/or in the Boat's warranty certificate.

2. Warranty Provider

This Limited Warranty is provided solely by Axopar. Contact details are shown in the warranty certificate provided to the Purchaser upon delivery of the Boat. All warranties provided by the manufacturers and distributors of components, equipment and parts of the Boat are hereby assigned to the Purchaser to the extent permitted by the applicable manufacturers and distributors, as Purchaser's sole and exclusive remedy with respect to those items.

3. Warranty Period and Limitations

The Limited Warranty is valid from the delivery date of the Boat to the Purchaser, as reflected in the Boat's warranty certificate (the "*Delivery Date*"), for the time periods identified below.

(A) ***Five-Year Limited Warranty on Structural Hull:***

Axopar will repair or replace any substantial defect in material or workmanship in the Boat's structural hull that is reported within five years from the Delivery Date. The structural hull means the fiberglass molded shell and all its integral structural components. A defect is substantial if it causes the Boat to be unfit or unsafe for general use as a pleasure craft under normal operating conditions.

(B) ***Two-Year Limited Warranty on Components Manufactured or Installed by Axopar:***

Axopar will repair or replace any components manufactured or installed by Axopar that are defective in factory materials or workmanship and are reported within two years from the Delivery Date (and are not already addressed in the specific warranties provided in paragraphs (A) and (C)).

(C) ***One-Year Limited Warranty on Upholstered Items, Canvas, Floor Materials, Other Coating and Painted Parts:***

Axopar will repair or replace any upholstered items, canvas, floor materials, other coating, and painted parts manufactured or installed by Axopar that are defective in factory materials or workmanship and are reported within one year from the Delivery Date.

(D) ***Exclusions***

The Limited Warranty does not apply to or cover the following items: (1) any costs incurred from hauling or transporting the Boat to and from the Service Location; (2) any equipment, parts or accessories not installed by Axopar or that carry their own individual warranties provided by third parties, including but not limited to engines, propellers, pre-rigging equipment, batteries, generators, A/C units, steering mechanisms and other electronic equipment; (3) minor changes to the Boat's external surfaces that have no influence on the strength or serviceability of the Boat, including but not limited to any damage, deterioration, fading or discoloration or mold of cushions, cracking, fading or oxidation of gel coat, stress lines, anti-fouling bottom paint or other slight irregularities in paint work, lacquer work, woodwork or chrome finish or other minor surface blemishes; (4) windshield damage or leakage; (5) any damage resulting from Purchaser's or a third party's negligence, willful misconduct, improper use of the Boat, overloading, powering in excess of the recommended maximum horsepower, improper rigging, misuse or alterations or repairs or attempted repairs on the Boat not authorized by Axopar, including use of an improper trailer, Boat lift or sling; (6) failure of the Purchaser or any third party to use, maintain or store the Boat as specified in the owner's manual, or any other failure to provide reasonable care and maintenance; (7) normal wear and tear items, including but not limited to ropes, filters, bulbs and batteries; (8) any representation or implication of the Boat's properties or characteristics, such as speed, weight, range, performance or fuel consumption; (9) any failure or defect not reported to Axopar or Dealer in accordance with Section 4 (Warranty Procedures) of this Limited Warranty; (10) any failure or defect arising from repairs made by unauthorized service providers; (11) any failure or defect arising from acts of nature; and (12) any Boat that was previously salvaged or declared a total loss or constructive loss for any reason.

(E) ***Voiding the Limited Warranty***

This warranty becomes void if: (1) Purchaser sells or otherwise conveys the Boat to a third party during the warranty period and Axopar is not provided with the bill of sale of the Boat

and/or the contact information of the new owner; (2) Purchaser uses the Boat in other than non-commercial activities; (3) the Boat is used in a competitive event; (4) any unauthorized modifications or changes are made to the Boat (e.g. structural modification or modifications to electrical systems on board or the programming of its engine or other systems); or (5) the Boat is salvaged or declared a total loss or constructive loss for any reason.

4. Warranty Procedures

To obtain warranty service, Purchaser must notify the Dealer about the failure or defect within a reasonable time after becoming aware of it or after Purchaser should have become aware of it. Upon detecting a defect, the Purchaser is required to take all reasonable steps necessary to prevent the defect from deteriorating further. When reporting any defect, the Purchaser must provide the Boat's hull identification number, a copy of the warranty certificate, a reasonable number of clear and detailed photos of the defect, and a supported or documented explanation regarding when the Boat was purchased and the Dealer from which it was purchased.

After providing notice of the defect to the Dealer, the Dealer will notify Purchaser of the procedures to follow regarding this Limited Warranty. Dealer will then notify Axopar, and upon being notified of the warranty claim by Dealer, Axopar is solely responsible for determining and authorizing in writing the remedial action to be performed.

5. Axopar's Warranty Responsibilities

Axopar has always the right to repair a defect covered by this Limited Warranty if, in view of the nature and extent of the defect, it can be done within a reasonable time and in such a way that it does not result in repair costs or material detriment to the Purchaser. All repairs shall be carried out in a way and at the Service Location designated by Axopar.

If Axopar determines that repair is not possible, Purchaser has the right to a discount proportionate to the defect. Alternatively, Axopar may, in its sole discretion, offer to Purchaser a replacement Boat with a market value equal to the replaced Boat's market value (considering the Boat's age and condition) if it did not have that specific unrepairable defect.

If Axopar reasonably determines that the Boat defect is not covered by the Limited Warranty, Axopar has the right to charge the Purchaser for any costs that arise from inspecting and determining the defect and its cause. Any repair costs and expenses are subject mutual agreement by Axopar and the Purchaser.

6. Sole Remedy and Other Limitations

The repair, discount and replacement obligations specified in Section 5 (Axopar's Warranty Responsibilities) for parts or materials covered by this Limited Warranty are Purchaser's sole and exclusive remedy, and Axopar's sole obligations, for any claims whatsoever or any losses resulting from product failure.

This Limited Warranty the final, complete and exclusive warranty offered by Axopar regarding the Boat, and no other person or entity (including the Dealer or its respective sales agents or employees) is authorized to make any other warranties or representations on behalf of Axopar. **EXCEPT FOR THE EXPRESS LIMITED WARRANTIES PROVIDED IN THIS LIMITED WARRANTY, AXOPAR DISCLAIMS ALL OTHER EXPRESS AND IMPLIED WARRANTIES AND REPRESENTATIONS OF ANY KIND, INCLUDING ANY IMPLIED WARRANTY OF MERCHANTABILITY, AND FITNESS FOR A PARTICULAR PURPOSE. EXCEPT AS OTHERWISE PROVIDED IN THIS LIMITED WARRANTY, ALL BOATS ARE PROVIDED "AS IS" AND "WITH ALL FAULTS".** If and to the extent that an implied warranty cannot be disclaimed, that warranty is limited to duration of the respective express Limited Warranty provided herein. Some countries do not allow the exclusion of implied warranties or do not allow limitations on the amount of time an implied warranty lasts, so the above limitations may not apply to some Purchasers.

To the extent permitted by applicable law, Axopar disclaims all liability to Purchaser and third parties for any economic loss arising from claims of product failure, negligence, defective design, lack of seaworthiness, manufacturing defect and any other liability not expressly covered in this Limited Warranty. **TO THE EXTENT PERMITTED BY APPLICABLE LAW, NEITHER AXOPAR NOR DEALER SHALL UNDER ANY CIRCUMSTANCES BE LIABLE FOR ANY INDIRECT, CONSEQUENTIAL, SPECIAL, ENHANCED, OR PUNITIVE DAMAGES, INCLUDING LOSS OF THE BOAT, PROFIT, PRODUCTIVITY, BUSINESS, CONTRACTS, REVENUES OR ANTICIPATED SAVINGS, OR INCREASED COSTS OR EXPENSES, AND IN NO EVENT SHALL AXOPAR'S LIABILITY EXCEED THE ACTUAL AMOUNT PAID BY PURCHASER FOR THE BOAT.** Some countries do not allow the exclusion or limitation of incidental or consequential damages, so the above limitation or exclusion may not apply to every Purchaser.

If, at any time, any provision of this Limited Warranty is or becomes illegal, invalid or unenforceable in any respect under the laws of any jurisdiction, the legality, validity or enforceability of the remaining provisions will remain unaffected.

7. Arbitration and Limitation on Actions

PLEASE READ THIS SECTION CAREFULLY. WE WANT YOU TO KNOW HOW IT AFFECTS YOUR RIGHTS.

(A) *Customer Service and FAQs*

In the unlikely event that an issue, concern or claim (including legal claims) remains unresolved after the procedure specified in Section 4 (Warranty Procedures) and the issue has been escalated to Axopar, Purchaser and Axopar each agree to discuss any issue informally for at least 30 days. Purchaser can do this by sending your full name and contact information, your concern and your requested solution to Axopar at warranty@axopar.fi, Attn: Legal Department. If Axopar would like to discuss an issue with Purchaser, Axopar will contact you at the address provided to the Dealer.

(B) *Agreement to Arbitrate*

If an agreed solution is not reached at the end of the 30-day discussion period, Purchaser and Axopar each agree that any issue, concern or claim (including legal claims) that either may have arising out of or relating to this Limited Warranty must be resolved through final binding arbitration. The arbitrator's decision will be binding and may be enforced and entered as a judgment in any court of competent jurisdiction. If the arbitrator rules against Axopar, Axopar will reimburse Purchaser for reasonable attorneys' fees and costs, regardless of who initiated the arbitration. However, if the arbitrator rules in Axopar's favor, Axopar will not seek reimbursement of attorneys' fees and costs, regardless of who initiated the arbitration.

(C) *Time Limitation; No Class Actions*

To help resolve any issues between us promptly and directly, Axopar and Purchaser agree to begin any arbitration under this Limited Warranty within one year after the claim first arose; otherwise, the claim is waived. Axopar and Purchaser also agree to arbitrate in each of our individual capacities only – not as a representative or member of a class – and each of us expressly waives any right to file a class action or seek relief on a class action basis. Furthermore, unless Purchaser and Axopar agree in writing, the arbitrator may not consolidate more than one person's claims and may not otherwise preside over any form of a representative of class proceeding.

(D) *Confidentiality*

All arbitration proceedings are confidential, unless both Purchaser and Axopar agree otherwise. Arbitration orders and awards required to be filed with applicable courts of competent jurisdiction are not confidential and may be disclosed by the parties to such courts. A party who improperly discloses confidential information will be subject to sanctions. The arbitrator and forum may disclose case filings, case dispositions, and other case information as required by a court order of proper jurisdiction.